

Shown 800mm high

Angel Cast Iron Radiator

A highly ornate cast iron radiator, every section cast with cherubs and lions among scrolling foliage. Hand built in England and made to order in your choice of finish, 800mm high from 4 to 40 sections.

Height	Sections	Style	Section Width	Depth
800mm	**4 to 40**	**Ornate**	**61.2mm**	**200mm, 215mm at the feet**

Floor To Lower Tapping	Working Pressure	Test Pressure	Heat Outputs	Tapping Centres
110mm	**2.5 bar maximum**	**3.3 bar**	**Delta T30, T50 and T60, BS EN442**	**645mm**

At A Glance

Height	Tapping Centres	Floor To Top Tapping	10 Sections : Delta T50	Page
800mm	645mm	755mm	3,963 BTU	2

Ordering and care : page 3

Good To Know

10 Year Guarantee
On every radiator.

Hand Built In England
Made to order in your finish.

Free Delivery
On orders of £1,000 or more, to a date you choose.

THE CAST IRON RADIATOR COMPANY
MADE IN ENGLAND

800mm High : Sizes, Heat Outputs And Drawing

Sections	Length mm	BTU Delta T30	Watts Delta T30	BTU Delta T50	Watts Delta T50	BTU Delta T60	Watts Delta T60	Weight kg	Water litres
4	279	817	240	**1,585**	465	2,008	589	57	7.00
5	340	1,022	299	**1,982**	581	2,511	736	71	8.75
6	401	1,225	359	**2,378**	697	3,013	883	85	10.50
7	462	1,429	419	**2,774**	813	3,515	1,030	100	12.25
8	523	1,633	478	**3,170**	929	4,017	1,177	114	14.00
9	584	1,838	539	**3,567**	1,045	4,519	1,324	128	15.75
10	646	2,042	599	**3,963**	1,162	5,021	1,472	142	17.50
11	707	2,246	658	**4,359**	1,278	5,523	1,619	156	19.25
12	768	2,452	719	**4,756**	1,394	6,025	1,766	171	21.00
13	829	2,654	778	**5,152**	1,510	6,528	1,913	185	22.75
14	890	2,858	838	**5,548**	1,626	7,030	2,060	199	24.50
15	951	3,064	898	**5,945**	1,742	7,532	2,207	213	26.25
16	1,012	3,267	957	**6,341**	1,858	8,034	2,355	228	28.00
17	1,074	3,471	1,018	**6,737**	1,975	8,536	2,502	242	29.75
18	1,135	3,675	1,077	**7,133**	2,091	9,038	2,649	256	31.50
19	1,196	3,881	1,137	**7,530**	2,207	9,540	2,796	270	33.25
20	1,257	4,084	1,197	**7,926**	2,323	10,042	2,943	284	35.00
21	1,318	4,288	1,257	**8,322**	2,439	10,544	3,090	299	36.75
22	1,379	4,493	1,317	**8,719**	2,555	11,047	3,238	313	38.50
23	1,440	4,696	1,376	**9,115**	2,671	11,549	3,385	327	40.25
24	1,502	4,900	1,436	**9,511**	2,788	12,051	3,532	341	42.00
25	1,563	5,106	1,497	**9,908**	2,904	12,553	3,679	356	43.75
26	1,624	5,310	1,556	**10,304**	3,020	13,055	3,826	370	45.50
27	1,685	5,513	1,616	**10,700**	3,136	13,557	3,973	384	47.25
28	1,746	5,719	1,676	**11,097**	3,252	14,059	4,121	398	49.00
29	1,807	5,923	1,736	**11,493**	3,368	14,561	4,268	412	50.75
30	1,869	6,125	1,796	**11,889**	3,485	15,064	4,415	427	52.50
31	1,930	6,329	1,855	**12,285**	3,601	15,566	4,562	441	54.25
32	1,991	6,535	1,915	**12,682**	3,717	16,068	4,709	455	56.00
33	2,052	6,739	1,975	**13,078**	3,833	16,570	4,856	469	57.75
34	2,113	6,942	2,035	**13,474**	3,949	17,072	5,004	484	59.50
35	2,174	7,148	2,095	**13,871**	4,065	17,574	5,151	498	61.25
36	2,235	7,352	2,154	**14,267**	4,181	18,076	5,298	512	63.00
37	2,297	7,556	2,215	**14,663**	4,298	18,578	5,445	526	64.75
38	2,358	7,761	2,275	**15,060**	4,414	19,080	5,592	540	66.50
39	2,419	7,964	2,334	**15,456**	4,530	19,583	5,739	555	68.25
40	2,480	8,168	2,394	**15,852**	4,646	20,085	5,886	569	70.00

Lengths include the bush ends and are approximate, as cast iron is made by hand ; each extra section adds 61.2mm. Outputs to BS EN442. Delta T30 is calculated from the tested Delta T50 and T60 figures. Longer lengths on request. Height is to the top of the section ; the small knob on each section rises about 10mm above it.

Technical Drawing Scale 1:10 on A4. In mm, approximate.

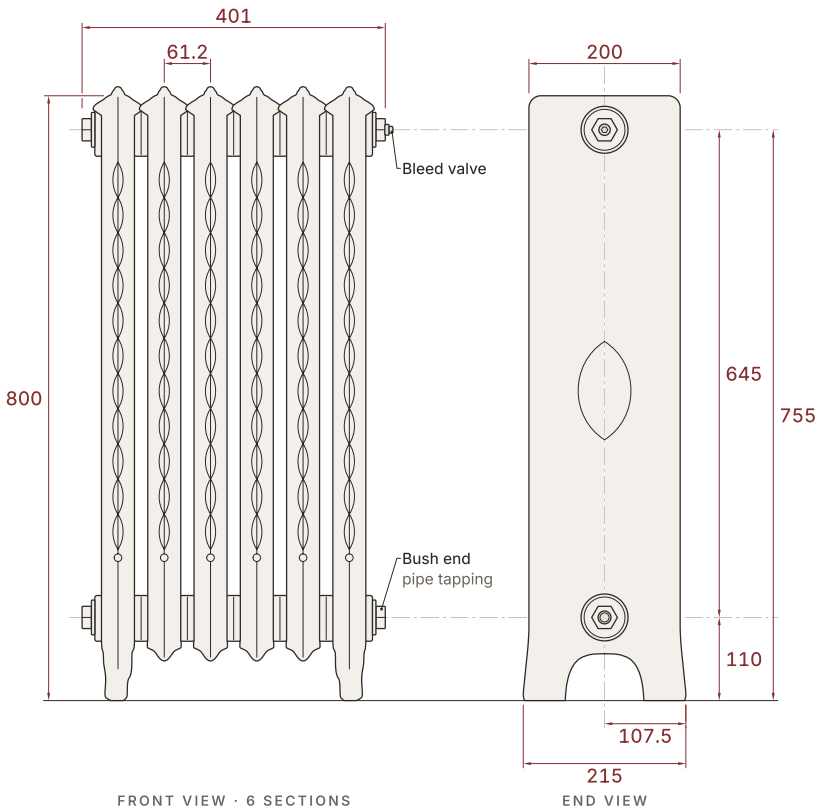

Finishes, Ordering And Care

Finishes

Every radiator is finished to order. Choose from our signature colours, traditional paint colours and antiqued or highlight paint effects.

Colour samples are available, and the sample charge is refunded when you order your radiator.

Made To Order

Hand built in England and made to order. Painted radiators take 4 to 6 weeks.

Delivery And Guarantee

Free delivery on orders of £1,000 or more, booked on a date that suits you. We deliver to Great Britain only. Every radiator carries our 10 year guarantee.

Valves And Accessories

Choose valves, wall stays, air vents and bush ends with your radiator on our website, so everything arrives together and matched to your finish.

Before You Fit

The radiator stands on its own feet. Check the floor can carry the filled weight, which is the radiator's weight plus about 1kg for every litre of water. Both are shown in the table on page 2.

We recommend fitting by a qualified heating engineer. Maximum working pressure 2.5 bar ; tested to 3.3 bar.

Visit Our Showroom

See our radiators finished and fitted in Brentwood. Open Monday to Friday from 9am to 5pm by appointment, and Saturdays from 10am to 2pm with no appointment needed.

When You Order

1 Height And Sections
Or the length that fits and the heat the room needs.

2 Finish
Your colour or paint effect.

3 Valves And Accessories
Valves, wall stays, air vents and bush ends.

4 Delivery Date
A date that suits you.



Front, 800mm High



End, 800mm High



Fitted

Call
01277 717 174

Email
sales@castironradiatorcompany.co.uk

Online
castironradiatorcompany.co.uk

Showroom
The Cast Iron Radiator Company
5-7 Coptfold Road
Brentwood, Essex CM14 4BN