

Shown 650mm high in Old Pewter

Greenwich Cast Iron Radiator

A slender two column cast iron radiator in a plain Edwardian style, just 70mm deep with feet 90mm across, for rooms where space is tight. Hand built in England and made to order in your choice of finish, in three heights from 4 to 40 sections.

Heights	Sections	Columns	Section Width	Depth
500, 650 and 750mm	**4 to 40**	**2**	**61mm**	**70mm, 90mm at the feet**

Floor To Lower Tapping	Working Pressure	Test Pressure	Heat Outputs	Tapping Centres
110mm at every height	**2.5 bar maximum**	**3.3 bar**	**Delta T30, T50 and T60, BS EN442**	**352, 505 and 605mm**

Heights At A Glance

Height	Tapping Centres	Floor To Top Tapping	10 Sections : Delta T50	Page
500mm	352mm	462mm	1,600 BTU	3
650mm	505mm	615mm	1,800 BTU	4
750mm	605mm	715mm	2,100 BTU	5

Every height compared : page 2 **Ordering and care : page 6**

Good To Know

10 Year Guarantee
On every radiator.

Hand Built In England
Made to order in your finish.

Free Delivery
On orders of £1,000 or more, to a date you choose.

Choose Your Size : Every Height At Delta T50

1 Measure The Space

Find the length that fits under the window or along the wall. Lengths include the bush ends.

2 Find The Heat You Need

Read along the row to the height that gives the BTU or watts your room needs. Our website's BTU calculator works it out.

3 Open That Height's Page

It has Delta T60 outputs, weight, water content and the drawing with its tapping heights.

Delta T is the difference between the average water temperature in the radiator and the room temperature. Our website shows Delta T50.

Sections	Length mm	500mm BTU	500mm Watts	650mm BTU	650mm Watts	750mm BTU	750mm Watts
4	269	**640**	188	**720**	212	**840**	248
5	330	**800**	235	**900**	265	**1,050**	310
6	391	**960**	282	**1,080**	318	**1,260**	372
7	452	**1,120**	329	**1,260**	371	**1,470**	434
8	513	**1,280**	376	**1,440**	424	**1,680**	496
9	574	**1,440**	423	**1,620**	477	**1,890**	558
10	635	**1,600**	470	**1,800**	530	**2,100**	620
11	696	**1,760**	517	**1,980**	583	**2,310**	682
12	757	**1,920**	564	**2,160**	636	**2,520**	744
13	818	**2,080**	611	**2,340**	689	**2,730**	806
14	879	**2,240**	658	**2,520**	742	**2,940**	868
15	940	**2,400**	705	**2,700**	795	**3,150**	930
16	1,001	**2,560**	752	**2,880**	848	**3,360**	992
17	1,062	**2,720**	799	**3,060**	901	**3,570**	1,054
18	1,123	**2,880**	846	**3,240**	954	**3,780**	1,116
19	1,184	**3,040**	893	**3,420**	1,007	**3,990**	1,178
20	1,245	**3,200**	940	**3,600**	1,060	**4,200**	1,240
21	1,306	**3,360**	987	**3,780**	1,113	**4,410**	1,302
22	1,367	**3,520**	1,034	**3,960**	1,166	**4,620**	1,364
23	1,428	**3,680**	1,081	**4,140**	1,219	**4,830**	1,426
24	1,489	**3,840**	1,128	**4,320**	1,272	**5,040**	1,488
25	1,550	**4,000**	1,175	**4,500**	1,325	**5,250**	1,550
26	1,611	**4,160**	1,222	**4,680**	1,378	**5,460**	1,612
27	1,672	**4,320**	1,269	**4,860**	1,431	**5,670**	1,674
28	1,733	**4,480**	1,316	**5,040**	1,484	**5,880**	1,736
29	1,794	**4,640**	1,363	**5,220**	1,537	**6,090**	1,798
30	1,855	**4,800**	1,410	**5,400**	1,590	**6,300**	1,860
31	1,916	**4,960**	1,457	**5,580**	1,643	**6,510**	1,922
32	1,977	**5,120**	1,504	**5,760**	1,696	**6,720**	1,984
33	2,038	**5,280**	1,551	**5,940**	1,749	**6,930**	2,046
34	2,099	**5,440**	1,598	**6,120**	1,802	**7,140**	2,108
35	2,160	**5,600**	1,645	**6,300**	1,855	**7,350**	2,170
36	2,221	**5,760**	1,692	**6,480**	1,908	**7,560**	2,232
37	2,282	**5,920**	1,739	**6,660**	1,961	**7,770**	2,294
38	2,343	**6,080**	1,786	**6,840**	2,014	**7,980**	2,356
39	2,404	**6,240**	1,833	**7,020**	2,067	**8,190**	2,418
40	2,465	**6,400**	1,880	**7,200**	2,120	**8,400**	2,480

500mm High : Sizes, Heat Outputs And Drawing

Sections	Length mm	BTU Delta T30	Watts Delta T30	BTU Delta T50	Watts Delta T50	BTU Delta T60	Watts Delta T60	Weight kg	Water litres
4	269	333	98	**640**	188	808	236	12	1.44
5	330	416	122	**800**	235	1,010	295	15	1.80
6	391	500	147	**960**	282	1,212	354	18	2.16
7	452	583	171	**1,120**	329	1,414	413	21	2.52
8	513	666	196	**1,280**	376	1,616	472	24	2.88
9	574	749	220	**1,440**	423	1,818	531	27	3.24
10	635	833	245	**1,600**	470	2,020	590	30	3.60
11	696	916	269	**1,760**	517	2,222	649	33	3.96
12	757	999	294	**1,920**	564	2,424	708	36	4.32
13	818	1,083	318	**2,080**	611	2,626	767	39	4.68
14	879	1,166	342	**2,240**	658	2,828	826	42	5.04
15	940	1,249	367	**2,400**	705	3,030	885	45	5.40
16	1,001	1,332	391	**2,560**	752	3,232	944	48	5.76
17	1,062	1,416	416	**2,720**	799	3,434	1,003	51	6.12
18	1,123	1,499	440	**2,880**	846	3,636	1,062	54	6.48
19	1,184	1,582	465	**3,040**	893	3,838	1,121	57	6.84
20	1,245	1,665	489	**3,200**	940	4,040	1,180	60	7.20
21	1,306	1,749	514	**3,360**	987	4,242	1,239	63	7.56
22	1,367	1,832	538	**3,520**	1,034	4,444	1,298	66	7.92
23	1,428	1,915	563	**3,680**	1,081	4,646	1,357	69	8.28
24	1,489	1,998	587	**3,840**	1,128	4,848	1,416	72	8.64
25	1,550	2,082	612	**4,000**	1,175	5,050	1,475	75	9.00
26	1,611	2,165	636	**4,160**	1,222	5,252	1,534	78	9.36
27	1,672	2,248	660	**4,320**	1,269	5,454	1,593	81	9.72
28	1,733	2,332	685	**4,480**	1,316	5,656	1,652	84	10.08
29	1,794	2,415	709	**4,640**	1,363	5,858	1,711	87	10.44
30	1,855	2,498	734	**4,800**	1,410	6,060	1,770	90	10.80
31	1,916	2,581	758	**4,960**	1,457	6,262	1,829	93	11.16
32	1,977	2,665	783	**5,120**	1,504	6,464	1,888	96	11.52
33	2,038	2,748	807	**5,280**	1,551	6,666	1,947	99	11.88
34	2,099	2,831	832	**5,440**	1,598	6,868	2,006	102	12.24
35	2,160	2,914	856	**5,600**	1,645	7,070	2,065	105	12.60
36	2,221	2,998	881	**5,760**	1,692	7,272	2,124	108	12.96
37	2,282	3,081	905	**5,920**	1,739	7,474	2,183	111	13.32
38	2,343	3,164	930	**6,080**	1,786	7,676	2,242	114	13.68
39	2,404	3,248	954	**6,240**	1,833	7,878	2,301	117	14.04
40	2,465	3,331	978	**6,400**	1,880	8,080	2,360	120	14.40

Lengths include the bush ends and are approximate, as cast iron is made by hand ; each extra section adds 61mm. Outputs to BS EN442. Delta T30 is calculated from the tested Delta T50 and T60 figures. Longer lengths on request.

Technical Drawing Scale 1:8 on A4, the same on every height. In mm, approximate.

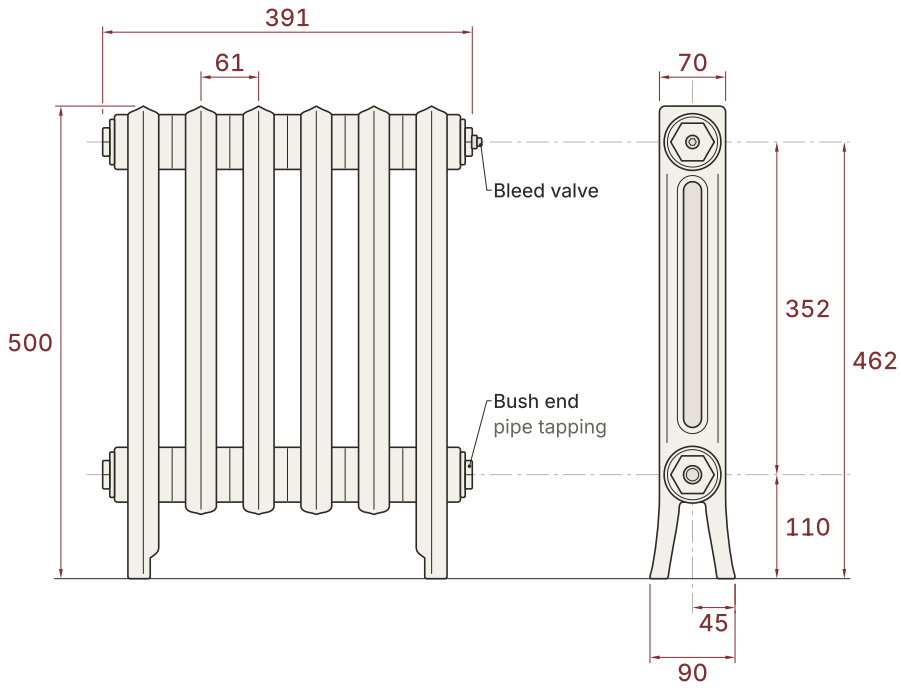

FRONT VIEW · 6 SECTIONS

END VIEW

650mm High : Sizes, Heat Outputs And Drawing

Sections	Length mm	BTU Delta T30	Watts Delta T30	BTU Delta T50	Watts Delta T50	BTU Delta T60	Watts Delta T60	Weight kg	Water litres
4	269	371	109	**720**	212	912	268	16	1.92
5	330	464	137	**900**	265	1,140	335	20	2.40
6	391	557	164	**1,080**	318	1,368	402	24	2.88
7	452	650	191	**1,260**	371	1,596	469	28	3.36
8	513	743	219	**1,440**	424	1,824	536	32	3.84
9	574	835	246	**1,620**	477	2,052	603	36	4.32
10	635	928	273	**1,800**	530	2,280	670	40	4.80
11	696	1,021	301	**1,980**	583	2,508	737	44	5.28
12	757	1,114	328	**2,160**	636	2,736	804	48	5.76
13	818	1,207	355	**2,340**	689	2,964	871	52	6.24
14	879	1,299	383	**2,520**	742	3,192	938	56	6.72
15	940	1,392	410	**2,700**	795	3,420	1,005	60	7.20
16	1,001	1,485	437	**2,880**	848	3,648	1,072	64	7.68
17	1,062	1,578	465	**3,060**	901	3,876	1,139	68	8.16
18	1,123	1,671	492	**3,240**	954	4,104	1,206	72	8.64
19	1,184	1,764	519	**3,420**	1,007	4,332	1,273	76	9.12
20	1,245	1,856	547	**3,600**	1,060	4,560	1,340	80	9.60
21	1,306	1,949	574	**3,780**	1,113	4,788	1,407	84	10.08
22	1,367	2,042	601	**3,960**	1,166	5,016	1,474	88	10.56
23	1,428	2,135	629	**4,140**	1,219	5,244	1,541	92	11.04
24	1,489	2,228	656	**4,320**	1,272	5,472	1,608	96	11.52
25	1,550	2,320	683	**4,500**	1,325	5,700	1,675	100	12.00
26	1,611	2,413	711	**4,680**	1,378	5,928	1,742	104	12.48
27	1,672	2,506	738	**4,860**	1,431	6,156	1,809	108	12.96
28	1,733	2,599	765	**5,040**	1,484	6,384	1,876	112	13.44
29	1,794	2,692	793	**5,220**	1,537	6,612	1,943	116	13.92
30	1,855	2,785	820	**5,400**	1,590	6,840	2,010	120	14.40
31	1,916	2,877	847	**5,580**	1,643	7,068	2,077	124	14.88
32	1,977	2,970	875	**5,760**	1,696	7,296	2,144	128	15.36
33	2,038	3,063	902	**5,940**	1,749	7,524	2,211	132	15.84
34	2,099	3,156	929	**6,120**	1,802	7,752	2,278	136	16.32
35	2,160	3,249	957	**6,300**	1,855	7,980	2,345	140	16.80
36	2,221	3,341	984	**6,480**	1,908	8,208	2,412	144	17.28
37	2,282	3,434	1,011	**6,660**	1,961	8,436	2,479	148	17.76
38	2,343	3,527	1,039	**6,840**	2,014	8,664	2,546	152	18.24
39	2,404	3,620	1,066	**7,020**	2,067	8,892	2,613	156	18.72
40	2,465	3,713	1,093	**7,200**	2,120	9,120	2,680	160	19.20

Lengths include the bush ends and are approximate, as cast iron is made by hand ; each extra section adds 61mm. Outputs to BS EN442. Delta T30 is calculated from the tested Delta T50 and T60 figures. Longer lengths on request.

Technical Drawing Scale 1:8 on A4, the same on every height. In mm, approximate.

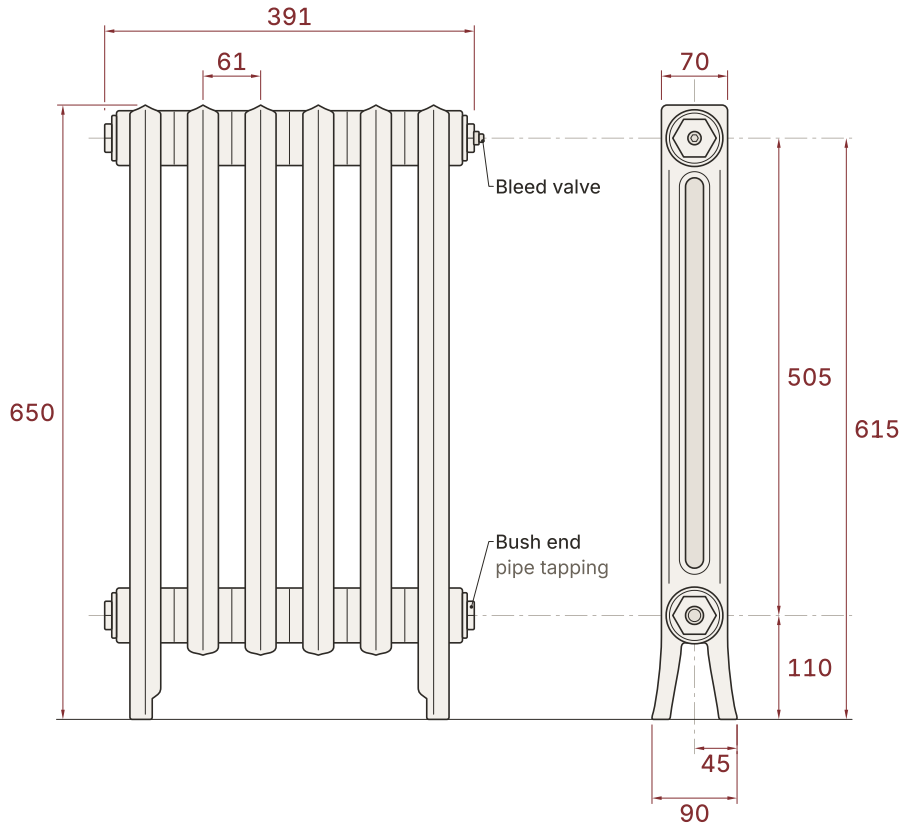

FRONT VIEW · 6 SECTIONS

END VIEW

750mm High : Sizes, Heat Outputs And Drawing

Sections	Length mm	BTU Delta T30	Watts Delta T30	BTU Delta T50	Watts Delta T50	BTU Delta T60	Watts Delta T60	Weight kg	Water litres
4	269	433	128	**840**	248	1,064	312	18	2.24
5	330	541	160	**1,050**	310	1,330	390	23	2.80
6	391	650	192	**1,260**	372	1,596	468	27	3.36
7	452	758	224	**1,470**	434	1,862	546	32	3.92
8	513	866	256	**1,680**	496	2,128	624	36	4.48
9	574	975	288	**1,890**	558	2,394	702	41	5.04
10	635	1,083	320	**2,100**	620	2,660	780	45	5.60
11	696	1,191	352	**2,310**	682	2,926	858	50	6.16
12	757	1,299	384	**2,520**	744	3,192	936	54	6.72
13	818	1,408	416	**2,730**	806	3,458	1,014	59	7.28
14	879	1,516	448	**2,940**	868	3,724	1,092	63	7.84
15	940	1,624	480	**3,150**	930	3,990	1,170	68	8.40
16	1,001	1,733	512	**3,360**	992	4,256	1,248	72	8.96
17	1,062	1,841	544	**3,570**	1,054	4,522	1,326	77	9.52
18	1,123	1,949	575	**3,780**	1,116	4,788	1,404	81	10.08
19	1,184	2,057	607	**3,990**	1,178	5,054	1,482	86	10.64
20	1,245	2,166	639	**4,200**	1,240	5,320	1,560	90	11.20
21	1,306	2,274	671	**4,410**	1,302	5,586	1,638	95	11.76
22	1,367	2,382	703	**4,620**	1,364	5,852	1,716	99	12.32
23	1,428	2,491	735	**4,830**	1,426	6,118	1,794	104	12.88
24	1,489	2,599	767	**5,040**	1,488	6,384	1,872	108	13.44
25	1,550	2,707	799	**5,250**	1,550	6,650	1,950	113	14.00
26	1,611	2,815	831	**5,460**	1,612	6,916	2,028	117	14.56
27	1,672	2,924	863	**5,670**	1,674	7,182	2,106	122	15.12
28	1,733	3,032	895	**5,880**	1,736	7,448	2,184	126	15.68
29	1,794	3,140	927	**6,090**	1,798	7,714	2,262	131	16.24
30	1,855	3,249	959	**6,300**	1,860	7,980	2,340	135	16.80
31	1,916	3,357	991	**6,510**	1,922	8,246	2,418	140	17.36
32	1,977	3,465	1,023	**6,720**	1,984	8,512	2,496	144	17.92
33	2,038	3,574	1,055	**6,930**	2,046	8,778	2,574	149	18.48
34	2,099	3,682	1,087	**7,140**	2,108	9,044	2,652	153	19.04
35	2,160	3,790	1,119	**7,350**	2,170	9,310	2,730	158	19.60
36	2,221	3,898	1,151	**7,560**	2,232	9,576	2,808	162	20.16
37	2,282	4,007	1,183	**7,770**	2,294	9,842	2,886	167	20.72
38	2,343	4,115	1,215	**7,980**	2,356	10,108	2,964	171	21.28
39	2,404	4,223	1,247	**8,190**	2,418	10,374	3,042	176	21.84
40	2,465	4,332	1,279	**8,400**	2,480	10,640	3,120	180	22.40

Lengths include the bush ends and are approximate, as cast iron is made by hand ; each extra section adds 61mm. Outputs to BS EN442. Delta T30 is calculated from the tested Delta T50 and T60 figures. Longer lengths on request.

Technical Drawing Scale 1:8 on A4, the same on every height. In mm, approximate.

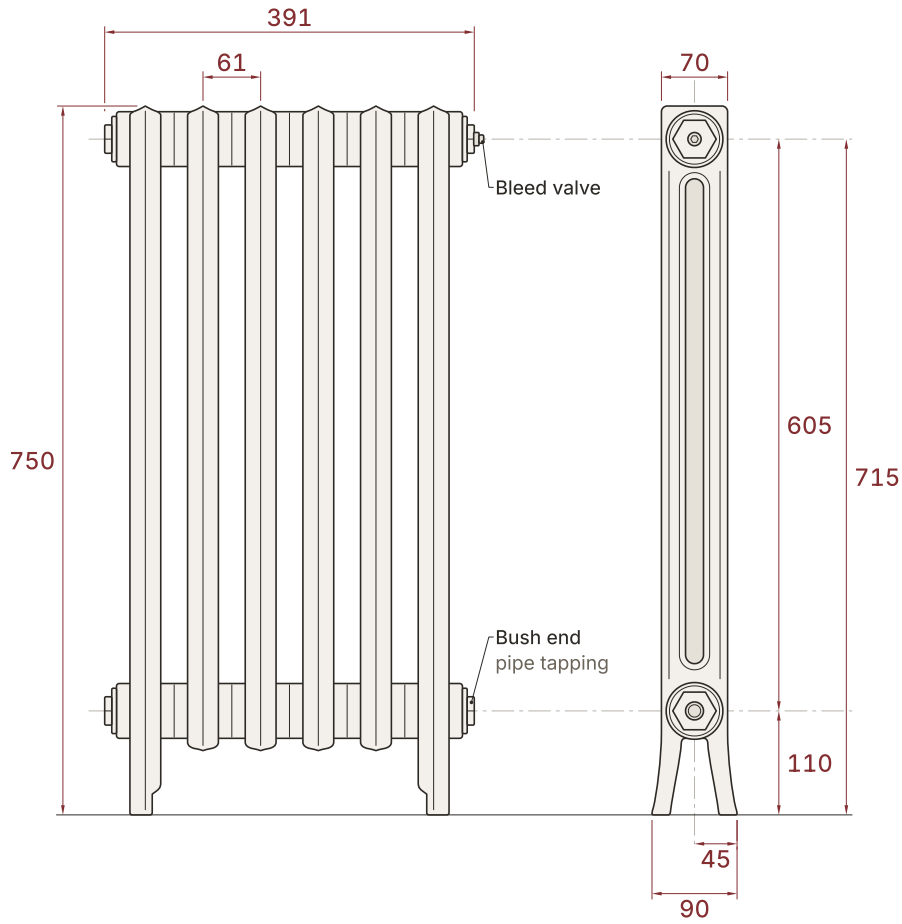

FRONT VIEW · 6 SECTIONS

END VIEW

Finishes, Ordering And Care

Finishes

Every radiator is finished to order. Choose from our signature colours, traditional paint colours and antiqued paint effects, or a hand polished finish.

Hand polished finishes are priced per finish. Colour samples are available, and the sample charge is refunded when you order your radiator.

Made To Order

Hand built in England and made to order. Painted radiators take 4 to 6 weeks and hand polished finishes 6 to 8 weeks.

Delivery And Guarantee

Free delivery on orders of £1,000 or more, booked on a date that suits you. We deliver to Great Britain only. Every radiator carries our 10 year guarantee.

Valves And Accessories

Choose valves, wall stays, air vents and bush ends with your radiator on our website, so everything arrives together and matched to your finish.

Before You Fit

The radiator stands on its own feet. Check the floor can carry the filled weight, which is the radiator's weight plus about 1kg for every litre of water. Both are shown on each height's page.

We recommend fitting by a qualified heating engineer. Maximum working pressure 2.5 bar ; tested to 3.3 bar.

Visit Our Showroom

See our radiators finished and fitted in Brentwood. Open Monday to Friday from 9am to 5pm by appointment, and Saturdays from 10am to 2pm with no appointment needed.



Front, 650mm High



End, 650mm High



500mm High



750mm High

When You Order

1 Height And Sections
Or the length that fits and the heat the room needs.

2 Finish
Your colour, or a hand polished finish.

3 Valves And Accessories
Valves, wall stays, air vents and bush ends.

4 Delivery Date
A date that suits you.

Call
01277 717 174

Email
sales@castironradiatorcompany.co.uk

Online
castironradiatorcompany.co.uk

Showroom
The Cast Iron Radiator Company
5-7 Coptfold Road
Brentwood, Essex CM14 4BN