

Shown 760mm high in Old Pewter

Islington Cast Iron Radiator

An ornate Rococo style cast iron radiator with a slim profile, just 110mm deep. Hand built in England and made to order in your choice of finish, in two heights from 4 to 40 sections.

Heights	Sections	Style	Section Width	Depth
560 and 760mm	**4 to 40**	**Ornate**	**71.5 to 72mm**	**110mm, 135mm at the feet**

Floor To Lower Tapping	Working Pressure	Test Pressure	Heat Outputs	Tapping Centres
105mm at every height	**2.5 bar maximum**	**3.3 bar**	**Delta T30, T50 and T60, BS EN442**	**Height less 160mm**

Heights At A Glance

Height	Tapping Centres	Floor To Top Tapping	10 Sections : Delta T50	Page
560mm	400mm	505mm	2,184 BTU	3
760mm	600mm	705mm	2,934 BTU	4

Every height compared : page 2 **Ordering and care : page 5**

Good To Know

10 Year Guarantee
On every radiator.

Hand Built In England
Made to order in your finish.

Free Delivery
On orders of £1,000 or more, to a date you choose.

Choose Your Size : Every Height At Delta T50

1 Measure The Space

Find the length that fits under the window or along the wall. Lengths include the bush ends.

2 Find The Heat You Need

Read along the row to the height that gives the BTU or watts your room needs. Our website's BTU calculator works it out.

3 Open That Height's Page

It has Delta T60 outputs, weight, water content and the drawing with its tapping heights.

Delta T is the difference between the average water temperature in the radiator and the room temperature. Our website shows Delta T50.

Sections	560mm Length mm	560mm BTU	560mm Watts	760mm Length mm	760mm BTU	760mm Watts
4	320	**873**	256	322	**1,174**	344
5	392	**1,092**	320	394	**1,467**	430
6	463	**1,310**	384	466	**1,761**	516
7	535	**1,529**	448	538	**2,054**	602
8	606	**1,747**	512	610	**2,347**	688
9	678	**1,965**	576	682	**2,641**	774
10	749	**2,184**	640	754	**2,934**	860
11	821	**2,402**	704	826	**3,228**	946
12	892	**2,620**	768	898	**3,521**	1,032
13	964	**2,839**	832	970	**3,815**	1,118
14	1,035	**3,057**	896	1,042	**4,108**	1,204
15	1,107	**3,276**	960	1,114	**4,401**	1,290
16	1,178	**3,494**	1,024	1,186	**4,695**	1,376
17	1,250	**3,712**	1,088	1,258	**4,988**	1,462
18	1,321	**3,931**	1,152	1,330	**5,282**	1,548
19	1,393	**4,149**	1,216	1,402	**5,575**	1,634
20	1,464	**4,367**	1,280	1,474	**5,869**	1,720
21	1,536	**4,586**	1,344	1,546	**6,162**	1,806
22	1,607	**4,804**	1,408	1,618	**6,456**	1,892
23	1,679	**5,022**	1,472	1,690	**6,749**	1,978
24	1,750	**5,241**	1,536	1,762	**7,042**	2,064
25	1,822	**5,459**	1,600	1,834	**7,336**	2,150
26	1,893	**5,678**	1,664	1,906	**7,629**	2,236
27	1,965	**5,896**	1,728	1,978	**7,923**	2,322
28	2,036	**6,114**	1,792	2,050	**8,216**	2,408
29	2,108	**6,333**	1,856	2,122	**8,510**	2,494
30	2,179	**6,551**	1,920	2,194	**8,803**	2,580
31	2,251	**6,769**	1,984	2,266	**9,096**	2,666
32	2,322	**6,988**	2,048	2,338	**9,390**	2,752
33	2,394	**7,206**	2,112	2,410	**9,683**	2,838
34	2,465	**7,425**	2,176	2,482	**9,977**	2,924
35	2,537	**7,643**	2,240	2,554	**10,270**	3,010
36	2,608	**7,861**	2,304	2,626	**10,564**	3,096
37	2,680	**8,080**	2,368	2,698	**10,857**	3,182
38	2,751	**8,298**	2,432	2,770	**11,150**	3,268
39	2,823	**8,516**	2,496	2,842	**11,444**	3,354
40	2,894	**8,735**	2,560	2,914	**11,737**	3,440

560mm High : Sizes, Heat Outputs And Drawing

Sections	Length mm	BTU Delta T30	Watts Delta T30	BTU Delta T50	Watts Delta T50	BTU Delta T60	Watts Delta T60	Weight kg	Water litres
4	320	451	132	**873**	256	1,105	324	25	3.30
5	392	564	165	**1,092**	320	1,382	405	31	4.10
6	463	677	198	**1,310**	384	1,658	486	37	4.90
7	535	790	232	**1,529**	448	1,935	567	43	5.70
8	606	903	265	**1,747**	512	2,211	648	50	6.60
9	678	1,016	298	**1,965**	576	2,487	729	56	7.40
10	749	1,129	331	**2,184**	640	2,764	810	62	8.20
11	821	1,242	364	**2,402**	704	3,040	891	68	9.00
12	892	1,354	397	**2,620**	768	3,316	972	74	9.80
13	964	1,467	430	**2,839**	832	3,593	1,053	80	10.70
14	1,035	1,580	463	**3,057**	896	3,869	1,134	87	11.50
15	1,107	1,693	496	**3,276**	960	4,146	1,215	93	12.30
16	1,178	1,806	529	**3,494**	1,024	4,422	1,296	99	13.10
17	1,250	1,919	562	**3,712**	1,088	4,698	1,377	105	13.90
18	1,321	2,032	595	**3,931**	1,152	4,975	1,458	111	14.80
19	1,393	2,144	629	**4,149**	1,216	5,251	1,539	118	15.60
20	1,464	2,257	662	**4,367**	1,280	5,527	1,620	124	16.40
21	1,536	2,370	695	**4,586**	1,344	5,804	1,701	130	17.20
22	1,607	2,483	728	**4,804**	1,408	6,080	1,782	136	18.00
23	1,679	2,594	760	**5,022**	1,472	6,357	1,863	142	18.90
24	1,750	2,709	794	**5,241**	1,536	6,633	1,944	149	19.70
25	1,822	2,822	827	**5,459**	1,600	6,909	2,025	155	20.50
26	1,893	2,935	860	**5,678**	1,664	7,186	2,106	161	21.30
27	1,965	3,047	893	**5,896**	1,728	7,462	2,187	167	22.10
28	2,036	3,160	926	**6,114**	1,792	7,738	2,268	173	23.00
29	2,108	3,273	959	**6,333**	1,856	8,015	2,349	180	23.80
30	2,179	3,386	992	**6,551**	1,920	8,291	2,430	186	24.60
31	2,251	3,497	1,025	**6,769**	1,984	8,568	2,511	192	25.40
32	2,322	3,612	1,059	**6,988**	2,048	8,844	2,592	198	26.20
33	2,394	3,725	1,092	**7,206**	2,112	9,120	2,673	204	27.10
34	2,465	3,838	1,125	**7,425**	2,176	9,397	2,754	210	27.90
35	2,537	3,950	1,158	**7,643**	2,240	9,673	2,835	217	28.70
36	2,608	4,063	1,191	**7,861**	2,304	9,949	2,916	223	29.50
37	2,680	4,176	1,224	**8,080**	2,368	10,226	2,997	229	30.30
38	2,751	4,289	1,257	**8,298**	2,432	10,502	3,078	235	31.20
39	2,823	4,400	1,290	**8,516**	2,496	10,779	3,159	241	32.00
40	2,894	4,515	1,323	**8,735**	2,560	11,055	3,240	248	32.80

Lengths include the bush ends and are approximate, as cast iron is made by hand ; each extra section adds 71.5mm. Outputs to BS EN442. Delta T30 is calculated from the tested Delta T50 and T60 figures. Longer lengths on request.

Technical Drawing

Scale 1:10 on A4, the same on every height. In mm, approximate.

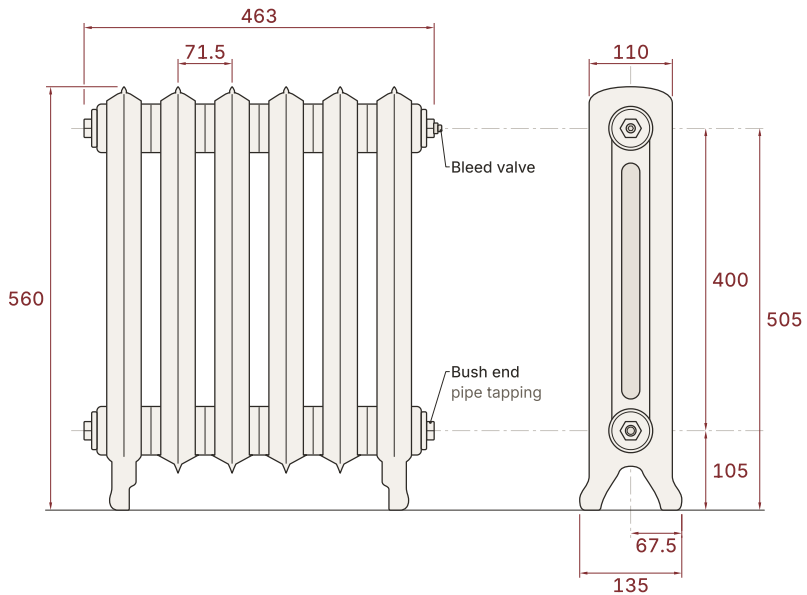

FRONT VIEW · 6 SECTIONS

END VIEW

760mm High : Sizes, Heat Outputs And Drawing

Sections	Length mm	BTU Delta T30	Watts Delta T30	BTU Delta T50	Watts Delta T50	BTU Delta T60	Watts Delta T60	Weight kg	Water litres
4	322	604	177	**1,174**	344	1,488	436	33	4.30
5	394	754	221	**1,467**	430	1,860	545	41	5.40
6	466	908	266	**1,761**	516	2,231	654	50	6.50
7	538	1,058	310	**2,054**	602	2,603	763	58	7.60
8	610	1,208	354	**2,347**	688	2,975	872	66	8.60
9	682	1,360	399	**2,641**	774	3,347	981	75	9.70
10	754	1,510	443	**2,934**	860	3,719	1,090	83	10.80
11	826	1,662	487	**3,228**	946	4,091	1,199	91	11.90
12	898	1,812	531	**3,521**	1,032	4,463	1,308	99	13.00
13	970	1,964	576	**3,815**	1,118	4,835	1,417	108	14.00
14	1,042	2,114	620	**4,108**	1,204	5,207	1,526	116	15.10
15	1,114	2,264	664	**4,401**	1,290	5,579	1,635	124	16.20
16	1,186	2,416	708	**4,695**	1,376	5,951	1,744	132	17.30
17	1,258	2,568	753	**4,988**	1,462	6,322	1,853	141	18.40
18	1,330	2,720	797	**5,282**	1,548	6,694	1,962	149	19.40
19	1,402	2,870	841	**5,575**	1,634	7,066	2,071	157	20.50
20	1,474	3,022	886	**5,869**	1,720	7,438	2,180	166	21.60
21	1,546	3,172	930	**6,162**	1,806	7,810	2,289	174	22.70
22	1,618	3,324	974	**6,456**	1,892	8,182	2,398	182	23.80
23	1,690	3,474	1,018	**6,749**	1,978	8,554	2,507	190	24.80
24	1,762	3,624	1,062	**7,042**	2,064	8,926	2,616	199	25.90
25	1,834	3,776	1,107	**7,336**	2,150	9,298	2,725	207	27.00
26	1,906	3,926	1,151	**7,629**	2,236	9,670	2,834	215	28.10
27	1,978	4,078	1,195	**7,923**	2,322	10,042	2,943	224	29.20
28	2,050	4,230	1,240	**8,216**	2,408	10,413	3,052	232	30.20
29	2,122	4,382	1,284	**8,510**	2,494	10,785	3,161	240	31.30
30	2,194	4,532	1,328	**8,803**	2,580	11,157	3,270	248	32.40
31	2,266	4,682	1,372	**9,096**	2,666	11,529	3,379	257	33.50
32	2,338	4,834	1,417	**9,390**	2,752	11,901	3,488	265	34.60
33	2,410	4,984	1,461	**9,683**	2,838	12,273	3,597	273	35.60
34	2,482	5,136	1,505	**9,977**	2,924	12,645	3,706	282	36.70
35	2,554	5,286	1,549	**10,270**	3,010	13,017	3,815	290	37.80
36	2,626	5,438	1,594	**10,564**	3,096	13,389	3,924	298	38.90
37	2,698	5,588	1,638	**10,857**	3,182	13,761	4,033	306	40.00
38	2,770	5,739	1,682	**11,150**	3,268	14,133	4,142	315	41.00
39	2,842	5,892	1,727	**11,444**	3,354	14,504	4,251	323	42.10
40	2,914	6,042	1,771	**11,737**	3,440	14,876	4,360	331	43.20

Lengths include the bush ends and are approximate, as cast iron is made by hand ; each extra section adds 72mm. Outputs to BS EN442. Delta T30 is calculated from the tested Delta T50 and T60 figures. Longer lengths on request.

Technical Drawing Scale 1:10 on A4, the same on every height. In mm, approximate.

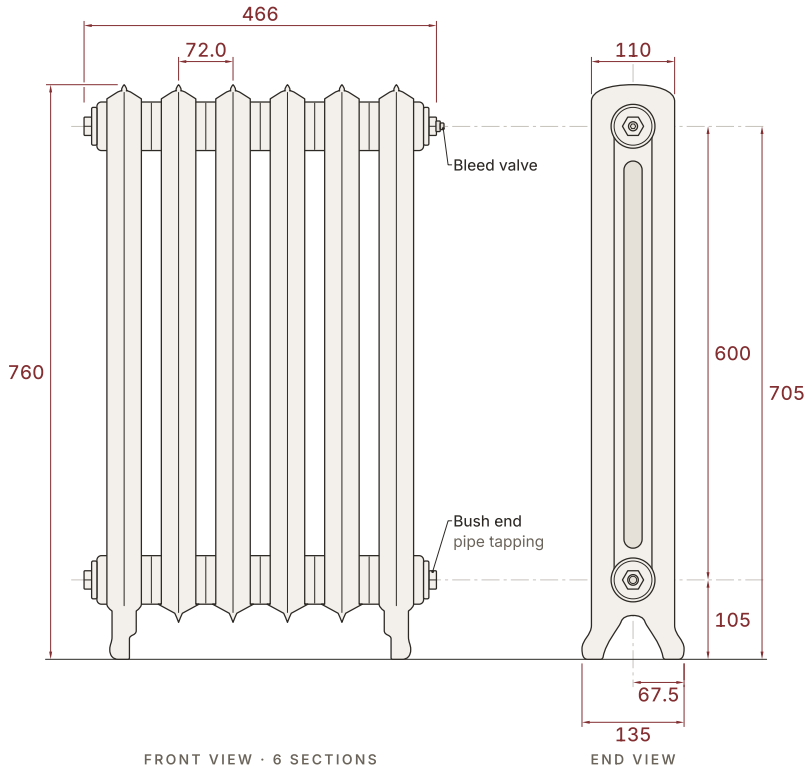

Finishes, Ordering And Care

Finishes

Every radiator is finished to order. Choose from our signature colours, traditional paint colours, antiqued and highlight paint effects, or a hand polished finish.

Hand polished finishes are priced per finish. Colour samples are available, and the sample charge is refunded when you order your radiator.

Made To Order

Hand built in England and made to order. Painted radiators take 4 to 6 weeks and hand polished finishes 6 to 8 weeks.

Delivery And Guarantee

Free delivery on orders of £1,000 or more, booked on a date that suits you. We deliver to Great Britain only. Every radiator carries our 10 year guarantee.

Valves And Accessories

Choose valves, wall stays, air vents and bush ends with your radiator on our website, so everything arrives together and matched to your finish.

Before You Fit

The radiator stands on its own feet. Check the floor can carry the filled weight, which is the radiator's weight plus about 1kg for every litre of water. Both are shown on each height's page.

We recommend fitting by a qualified heating engineer. Maximum working pressure 2.5 bar ; tested to 3.3 bar.

Visit Our Showroom

See our radiators finished and fitted in Brentwood. Open Monday to Friday from 9am to 5pm by appointment, and Saturdays from 10am to 2pm with no appointment needed.

When You Order

1 Height And Sections
Or the length that fits and the heat the room needs.

2 Finish
Your colour, or a hand polished finish.

3 Valves And Accessories
Valves, wall stays, air vents and bush ends.

4 Delivery Date
A date that suits you.



Front, 760mm High



End, 760mm High



560mm High

Call
01277 717 174

Email
sales@castironradiatorcompany.co.uk

Online
castironradiatorcompany.co.uk

Showroom
The Cast Iron Radiator Company
5-7 Coptfold Road
Brentwood, Essex CM14 4BN