

Shown 790mm high in Old Pewter

Mayfair Cast Iron Radiator

An ornate cast iron radiator with pointed gothic tops and a daisy pattern cast into every section, set on scrolled feet. Hand built in England and made to order in your choice of finish, in two heights from 4 to 40 sections.

Heights	Sections	Style	Section Width	Depth
590 and 790mm	**4 to 40**	**Ornate**	**71 to 71.6mm**	**170mm, 175mm at the feet**

Floor To Lower Tapping	Working Pressure	Test Pressure	Heat Outputs	Tapping Centres
110mm at every height	**2.5 bar maximum**	**3.3 bar**	**Delta T30, T50 and T60, BS EN442**	**Height less 190mm**

Heights At A Glance

Height	Tapping Centres	Floor To Top Tapping	10 Sections : Delta T50	Page
590mm	400mm	510mm	2,878 BTU	3
790mm	600mm	710mm	3,865 BTU	4

Every height compared : page 2 **Ordering and care : page 5**

Good To Know

10 Year Guarantee
On every radiator.

Hand Built In England
Made to order in your finish.

Free Delivery
On orders of £1,000 or more, to a date you choose.

Choose Your Size : Every Height At Delta T50

1 Measure The Space

Find the length that fits under the window or along the wall. Lengths include the bush ends.

2 Find The Heat You Need

Read along the row to the height that gives the BTU or watts your room needs. Our website's BTU calculator works it out.

3 Open That Height's Page

It has Delta T60 outputs, weight, water content and the drawing with its tapping heights.

Delta T is the difference between the average water temperature in the radiator and the room temperature. Our website shows Delta T50.

Sections	590mm Length mm	590mm BTU	590mm Watts	790mm Length mm	790mm BTU	790mm Watts
4	320	**1,151**	337	318	**1,546**	453
5	392	**1,439**	422	389	**1,932**	566
6	464	**1,727**	506	460	**2,319**	680
7	535	**2,015**	591	531	**2,705**	793
8	607	**2,303**	675	602	**3,092**	906
9	678	**2,591**	759	673	**3,478**	1,019
10	750	**2,878**	844	744	**3,865**	1,133
11	822	**3,166**	928	815	**4,251**	1,246
12	893	**3,454**	1,012	886	**4,638**	1,359
13	965	**3,742**	1,097	957	**5,024**	1,473
14	1,036	**4,030**	1,181	1,028	**5,411**	1,586
15	1,108	**4,318**	1,265	1,099	**5,797**	1,699
16	1,180	**4,605**	1,350	1,170	**6,184**	1,812
17	1,251	**4,893**	1,434	1,241	**6,570**	1,926
18	1,323	**5,181**	1,518	1,312	**6,957**	2,039
19	1,394	**5,469**	1,603	1,383	**7,343**	2,152
20	1,466	**5,757**	1,687	1,454	**7,730**	2,265
21	1,538	**6,045**	1,772	1,525	**8,116**	2,379
22	1,609	**6,332**	1,856	1,596	**8,502**	2,492
23	1,681	**6,620**	1,940	1,667	**8,889**	2,605
24	1,752	**6,908**	2,025	1,738	**9,275**	2,718
25	1,824	**7,196**	2,109	1,809	**9,662**	2,832
26	1,896	**7,484**	2,193	1,880	**10,048**	2,945
27	1,967	**7,772**	2,278	1,951	**10,435**	3,058
28	2,039	**8,059**	2,362	2,022	**10,821**	3,172
29	2,110	**8,347**	2,446	2,093	**11,208**	3,285
30	2,182	**8,635**	2,531	2,164	**11,594**	3,398
31	2,254	**8,923**	2,615	2,235	**11,981**	3,511
32	2,325	**9,211**	2,700	2,306	**12,367**	3,625
33	2,397	**9,499**	2,784	2,377	**12,754**	3,738
34	2,468	**9,786**	2,868	2,448	**13,140**	3,851
35	2,540	**10,074**	2,953	2,519	**13,527**	3,964
36	2,612	**10,362**	3,037	2,590	**13,913**	4,078
37	2,683	**10,650**	3,121	2,661	**14,300**	4,191
38	2,755	**10,938**	3,206	2,732	**14,686**	4,304
39	2,826	**11,226**	3,290	2,803	**15,073**	4,418
40	2,898	**11,513**	3,374	2,874	**15,459**	4,531

590mm High : Sizes, Heat Outputs And Drawing

Sections	Length mm	BTU Delta T30	Watts Delta T30	BTU Delta T50	Watts Delta T50	BTU Delta T60	Watts Delta T60	Weight kg	Water litres
4	320	592	173	**1,151**	337	1,459	428	32	6.00
5	392	742	218	**1,439**	422	1,823	534	40	7.50
6	464	890	261	**1,727**	506	2,188	641	49	9.00
7	535	1,038	305	**2,015**	591	2,553	748	57	10.50
8	607	1,187	348	**2,303**	675	2,918	855	65	12.00
9	678	1,336	391	**2,591**	759	3,282	962	73	13.50
10	750	1,482	435	**2,878**	844	3,647	1,069	81	15.00
11	822	1,631	478	**3,166**	928	4,012	1,176	89	16.50
12	893	1,780	522	**3,454**	1,012	4,376	1,283	97	18.00
13	965	1,928	565	**3,742**	1,097	4,741	1,389	105	19.50
14	1,036	2,077	609	**4,030**	1,181	5,106	1,496	113	21.00
15	1,108	2,226	652	**4,318**	1,265	5,470	1,603	121	22.50
16	1,180	2,372	695	**4,605**	1,350	5,835	1,710	129	24.00
17	1,251	2,521	739	**4,893**	1,434	6,200	1,817	137	25.50
18	1,323	2,670	782	**5,181**	1,518	6,564	1,924	145	27.00
19	1,394	2,818	826	**5,469**	1,603	6,929	2,031	154	28.50
20	1,466	2,967	869	**5,757**	1,687	7,294	2,138	162	30.00
21	1,538	3,116	913	**6,045**	1,772	7,658	2,245	170	31.50
22	1,609	3,262	956	**6,332**	1,856	8,023	2,351	178	33.00
23	1,681	3,411	999	**6,620**	1,940	8,388	2,458	186	34.50
24	1,752	3,559	1,043	**6,908**	2,025	8,753	2,565	194	36.00
25	1,824	3,708	1,087	**7,196**	2,109	9,117	2,672	202	37.50
26	1,896	3,857	1,130	**7,484**	2,193	9,482	2,779	210	39.00
27	1,967	4,005	1,174	**7,772**	2,278	9,847	2,886	218	40.50
28	2,039	4,152	1,217	**8,059**	2,362	10,211	2,993	226	42.00
29	2,110	4,301	1,260	**8,347**	2,446	10,576	3,100	234	43.50
30	2,182	4,449	1,304	**8,635**	2,531	10,941	3,207	242	45.00
31	2,254	4,598	1,348	**8,923**	2,615	11,305	3,313	251	46.50
32	2,325	4,747	1,391	**9,211**	2,700	11,670	3,420	259	48.00
33	2,397	4,895	1,435	**9,499**	2,784	12,035	3,527	267	49.50
34	2,468	5,042	1,478	**9,786**	2,868	12,399	3,634	275	51.00
35	2,540	5,191	1,522	**10,074**	2,953	12,764	3,741	283	52.50
36	2,612	5,339	1,565	**10,362**	3,037	13,129	3,848	291	54.00
37	2,683	5,488	1,608	**10,650**	3,121	13,493	3,955	299	55.50
38	2,755	5,637	1,652	**10,938**	3,206	13,858	4,062	307	57.00
39	2,826	5,785	1,695	**11,226**	3,290	14,223	4,168	315	58.50
40	2,898	5,931	1,738	**11,513**	3,374	14,588	4,275	323	60.00

Lengths include the bush ends and are approximate, as cast iron is made by hand ; each extra section adds 71.6mm. Outputs to BS EN442. Delta T30 is calculated from the tested Delta T50 and T60 figures. Longer lengths on request.

Technical Drawing

Scale 1:10 on A4, the same on every height. In mm, approximate.

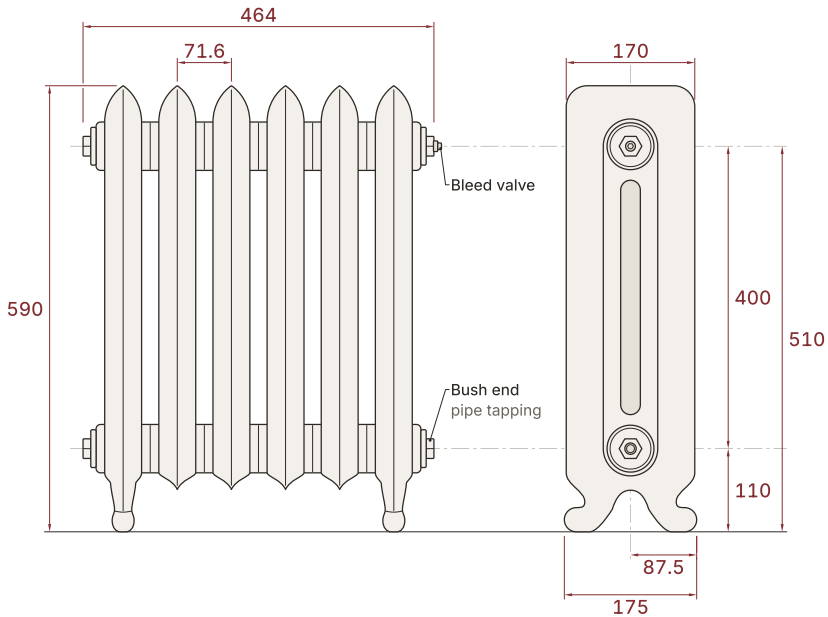

790mm High : Sizes, Heat Outputs And Drawing

Sections	Length mm	BTU Delta T30	Watts Delta T30	BTU Delta T50	Watts Delta T50	BTU Delta T60	Watts Delta T60	Weight kg	Water litres
4	318	796	233	**1,546**	453	1,959	574	43	8.40
5	389	995	292	**1,932**	566	2,448	718	53	10.50
6	460	1,195	350	**2,319**	680	2,938	861	64	12.60
7	531	1,393	408	**2,705**	793	3,428	1,005	75	14.70
8	602	1,594	467	**3,092**	906	3,917	1,148	85	16.80
9	673	1,792	525	**3,478**	1,019	4,407	1,292	96	18.90
10	744	1,992	584	**3,865**	1,133	4,897	1,435	106	21.00
11	815	2,190	642	**4,251**	1,246	5,386	1,579	117	23.10
12	886	2,390	700	**4,638**	1,359	5,876	1,722	128	25.20
13	957	2,588	759	**5,024**	1,473	6,366	1,866	138	27.30
14	1,028	2,789	817	**5,411**	1,586	6,855	2,009	149	29.40
15	1,099	2,987	875	**5,797**	1,699	7,345	2,153	160	31.50
16	1,170	3,187	934	**6,184**	1,812	7,835	2,296	170	33.60
17	1,241	3,386	992	**6,570**	1,926	8,324	2,440	181	35.70
18	1,312	3,585	1,051	**6,957**	2,039	8,814	2,583	192	37.80
19	1,383	3,783	1,109	**7,343**	2,152	9,304	2,727	202	39.90
20	1,454	3,984	1,167	**7,730**	2,265	9,793	2,870	213	42.00
21	1,525	4,182	1,226	**8,116**	2,379	10,283	3,014	223	44.10
22	1,596	4,380	1,284	**8,502**	2,492	10,773	3,157	234	46.20
23	1,667	4,581	1,342	**8,889**	2,605	11,262	3,301	245	48.30
24	1,738	4,779	1,400	**9,275**	2,718	11,752	3,444	255	50.40
25	1,809	4,978	1,459	**9,662**	2,832	12,242	3,588	266	52.50
26	1,880	5,177	1,517	**10,048**	2,945	12,731	3,731	277	54.60
27	1,951	5,377	1,576	**10,435**	3,058	13,221	3,875	287	56.70
28	2,022	5,575	1,634	**10,821**	3,172	13,711	4,018	298	58.80
29	2,093	5,776	1,693	**11,208**	3,285	14,200	4,162	309	60.90
30	2,164	5,974	1,751	**11,594**	3,398	14,690	4,305	319	63.00
31	2,235	6,173	1,809	**11,981**	3,511	15,180	4,449	330	65.10
32	2,306	6,372	1,868	**12,367**	3,625	15,669	4,592	341	67.20
33	2,377	6,572	1,926	**12,754**	3,738	16,159	4,736	351	69.30
34	2,448	6,770	1,984	**13,140**	3,851	16,649	4,879	362	71.40
35	2,519	6,971	2,043	**13,527**	3,964	17,138	5,023	372	73.50
36	2,590	7,169	2,101	**13,913**	4,078	17,628	5,166	383	75.60
37	2,661	7,369	2,160	**14,300**	4,191	18,118	5,310	394	77.70
38	2,732	7,568	2,218	**14,686**	4,304	18,607	5,453	404	79.80
39	2,803	7,767	2,277	**15,073**	4,418	19,097	5,597	415	81.90
40	2,874	7,965	2,335	**15,459**	4,531	19,587	5,741	426	84.00

Lengths include the bush ends and are approximate, as cast iron is made by hand ; each extra section adds 71mm. Outputs to BS EN442. Delta T30 is calculated from the tested Delta T50 and T60 figures. Longer lengths on request.

Technical Drawing

Scale 1:10 on A4, the same on every height. In mm, approximate.

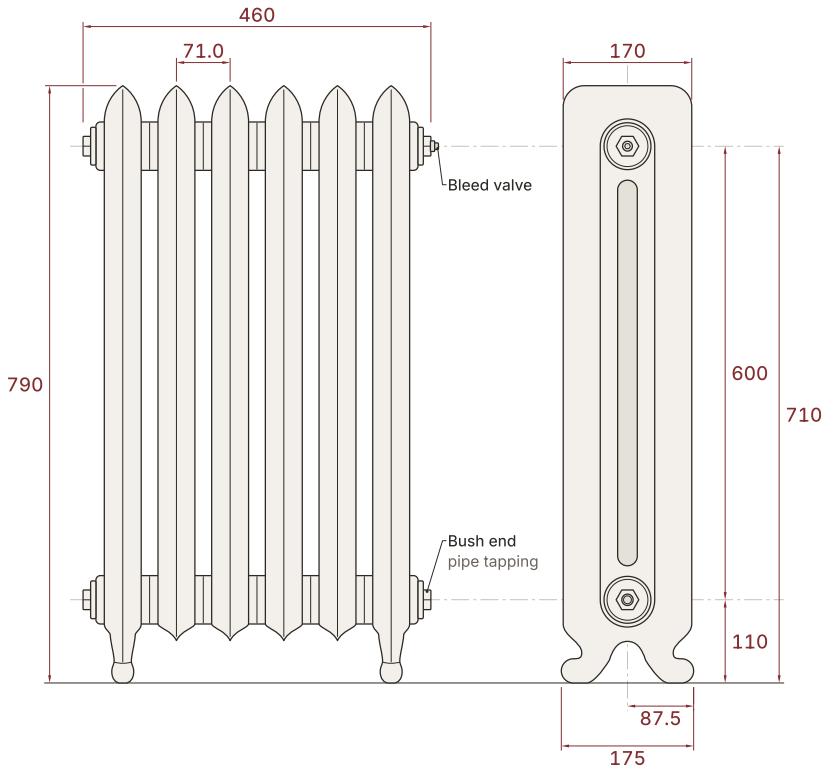

FRONT VIEW · 6 SECTIONS

END VIEW

Finishes, Ordering And Care

Finishes

Every radiator is finished to order. Choose from our signature colours, traditional paint colours, antiqued and highlight paint effects, or a hand polished finish.

Hand polished finishes are priced per finish. Colour samples are available, and the sample charge is refunded when you order your radiator.

Made To Order

Hand built in England and made to order. Painted radiators take 4 to 6 weeks and hand polished finishes 6 to 8 weeks.

Delivery And Guarantee

Free delivery on orders of £1,000 or more, booked on a date that suits you. We deliver to Great Britain only. Every radiator carries our 10 year guarantee.

Valves And Accessories

Choose valves, wall stays, air vents and bush ends with your radiator on our website, so everything arrives together and matched to your finish.

Before You Fit

The radiator stands on its own feet. Check the floor can carry the filled weight, which is the radiator's weight plus about 1kg for every litre of water. Both are shown on each height's page.

We recommend fitting by a qualified heating engineer. Maximum working pressure 2.5 bar ; tested to 3.3 bar.

Visit Our Showroom

See our radiators finished and fitted in Brentwood. Open Monday to Friday from 9am to 5pm by appointment, and Saturdays from 10am to 2pm with no appointment needed.

When You Order

1 Height And Sections
Or the length that fits and the heat the room needs.

2 Finish
Your colour, or a hand polished finish.

3 Valves And Accessories
Valves, wall stays, air vents and bush ends.

4 Delivery Date
A date that suits you.



Front, 790mm High



End, 790mm High



590mm High

Call
01277 717 174

Email
sales@castironradiatorcompany.co.uk

Online
castironradiatorcompany.co.uk

Showroom
The Cast Iron Radiator Company
5-7 Coptfold Road
Brentwood, Essex CM14 4BN