

Shown 660mm high in Old Pewter

Regent 6 Cast Iron Radiator

A deep six column cast iron radiator with clean, simple lines, giving more heat from every section than our four column at the same height. Hand built in England and made to order in your choice of finish, in three heights from 4 to 40 sections.

Heights	Sections	Columns	Section Width	Depth
505, 660 and 960mm	**4 to 40**	**6**	**60.8mm**	**221mm, 252mm at the feet**

Floor To Lower Tapping	Working Pressure	Test Pressure	Heat Outputs	Tapping Centres
105mm at every height	**6.0 bar maximum**	**7.8 bar**	**Delta T30, T50 and T60, BS EN442**	**Height less 150mm**

Heights At A Glance

Height	Tapping Centres	Floor To Top Tapping	10 Sections : Delta T50	Page
505mm	355mm	460mm	3,293 BTU	3
660mm	510mm	615mm	4,316 BTU	4
960mm	810mm	915mm	6,223 BTU	5

Every height compared : page 2 **Ordering and care : page 6**

Good To Know

10 Year Guarantee
On every radiator.

Hand Built In England
Made to order in your finish.

Free Delivery
On orders of £1,000 or more, to a date you choose.

Choose Your Size : Every Height At Delta T50

1 Measure The Space

Find the length that fits under the window or along the wall. Lengths include the bush ends.

2 Find The Heat You Need

Read along the row to the height that gives the BTU or watts your room needs. Our website's BTU calculator works it out.

3 Open That Height's Page

It has Delta T60 outputs, weight, water content and the drawing with its tapping heights.

Delta T is the difference between the average water temperature in the radiator and the room temperature. Our website shows Delta T50.

Sections	Length mm	505mm BTU	505mm Watts	660mm BTU	660mm Watts	960mm BTU	960mm Watts
4	269	**1,317**	386	**1,726**	506	**2,489**	730
5	330	**1,646**	483	**2,158**	633	**3,112**	912
6	391	**1,976**	579	**2,590**	759	**3,734**	1,094
7	452	**2,305**	676	**3,021**	886	**4,356**	1,277
8	512	**2,634**	772	**3,453**	1,012	**4,979**	1,459
9	573	**2,963**	869	**3,885**	1,139	**5,601**	1,642
10	634	**3,293**	965	**4,316**	1,265	**6,223**	1,824
11	695	**3,622**	1,062	**4,748**	1,392	**6,846**	2,006
12	756	**3,951**	1,158	**5,179**	1,518	**7,468**	2,189
13	816	**4,280**	1,255	**5,611**	1,645	**8,091**	2,371
14	877	**4,610**	1,351	**6,043**	1,771	**8,713**	2,554
15	938	**4,939**	1,448	**6,474**	1,898	**9,335**	2,736
16	999	**5,268**	1,544	**6,906**	2,024	**9,958**	2,918
17	1,060	**5,597**	1,641	**7,338**	2,151	**10,580**	3,101
18	1,120	**5,927**	1,737	**7,769**	2,277	**11,202**	3,283
19	1,181	**6,256**	1,834	**8,201**	2,404	**11,825**	3,466
20	1,242	**6,585**	1,930	**8,632**	2,530	**12,447**	3,648
21	1,303	**6,914**	2,027	**9,064**	2,657	**13,069**	3,830
22	1,364	**7,244**	2,123	**9,496**	2,783	**13,692**	4,013
23	1,424	**7,573**	2,220	**9,927**	2,910	**14,314**	4,195
24	1,485	**7,902**	2,316	**10,359**	3,036	**14,936**	4,378
25	1,546	**8,231**	2,413	**10,790**	3,163	**15,559**	4,560
26	1,607	**8,561**	2,509	**11,222**	3,289	**16,181**	4,742
27	1,668	**8,890**	2,606	**11,654**	3,416	**16,803**	4,925
28	1,728	**9,219**	2,702	**12,085**	3,542	**17,426**	5,107
29	1,789	**9,548**	2,799	**12,517**	3,669	**18,048**	5,290
30	1,850	**9,878**	2,895	**12,949**	3,795	**18,670**	5,472
31	1,911	**10,207**	2,992	**13,380**	3,922	**19,293**	5,654
32	1,972	**10,536**	3,088	**13,812**	4,048	**19,915**	5,837
33	2,032	**10,866**	3,185	**14,243**	4,175	**20,538**	6,019
34	2,093	**11,195**	3,281	**14,675**	4,301	**21,160**	6,202
35	2,154	**11,524**	3,378	**15,107**	4,428	**21,782**	6,384
36	2,215	**11,853**	3,474	**15,538**	4,554	**22,405**	6,566
37	2,276	**12,183**	3,571	**15,970**	4,681	**23,027**	6,749
38	2,336	**12,512**	3,667	**16,401**	4,807	**23,649**	6,931
39	2,397	**12,841**	3,764	**16,833**	4,934	**24,272**	7,114
40	2,458	**13,170**	3,860	**17,265**	5,060	**24,894**	7,296

505mm High : Sizes, Heat Outputs And Drawing

Sections	Length mm	BTU Delta T30	Watts Delta T30	BTU Delta T50	Watts Delta T50	BTU Delta T60	Watts Delta T60	Weight kg	Water litres
4	269	678	199	**1,317**	386	1,669	489	33	4.80
5	330	848	249	**1,646**	483	2,086	611	42	6.00
6	391	1,019	299	**1,976**	579	2,503	734	50	7.20
7	452	1,188	348	**2,305**	676	2,920	856	58	8.40
8	512	1,358	398	**2,634**	772	3,337	978	67	9.60
9	573	1,526	447	**2,963**	869	3,755	1,100	75	10.80
10	634	1,697	497	**3,293**	965	4,172	1,223	84	12.00
11	695	1,866	547	**3,622**	1,062	4,589	1,345	92	13.20
12	756	2,036	597	**3,951**	1,158	5,006	1,467	100	14.40
13	816	2,205	647	**4,280**	1,255	5,423	1,589	109	15.60
14	877	2,376	696	**4,610**	1,351	5,840	1,712	117	16.80
15	938	2,545	746	**4,939**	1,448	6,258	1,834	125	18.00
16	999	2,714	795	**5,268**	1,544	6,675	1,956	134	19.20
17	1,060	2,883	845	**5,597**	1,641	7,092	2,079	142	20.40
18	1,120	3,055	895	**5,927**	1,737	7,509	2,201	150	21.60
19	1,181	3,224	945	**6,256**	1,834	7,926	2,323	159	22.80
20	1,242	3,393	995	**6,585**	1,930	8,343	2,445	167	24.00
21	1,303	3,562	1,044	**6,914**	2,027	8,761	2,568	175	25.20
22	1,364	3,733	1,094	**7,244**	2,123	9,178	2,690	184	26.40
23	1,424	3,902	1,144	**7,573**	2,220	9,595	2,812	192	27.60
24	1,485	4,072	1,193	**7,902**	2,316	10,012	2,934	200	28.80
25	1,546	4,241	1,243	**8,231**	2,413	10,429	3,057	209	30.00
26	1,607	4,412	1,293	**8,561**	2,509	10,846	3,179	217	31.20
27	1,668	4,580	1,343	**8,890**	2,606	11,264	3,301	225	32.40
28	1,728	4,750	1,392	**9,219**	2,702	11,681	3,423	234	33.60
29	1,789	4,919	1,442	**9,548**	2,799	12,098	3,546	242	34.80
30	1,850	5,090	1,492	**9,878**	2,895	12,515	3,668	251	36.00
31	1,911	5,260	1,542	**10,207**	2,992	12,932	3,790	259	37.20
32	1,972	5,429	1,591	**10,536**	3,088	13,349	3,912	267	38.40
33	2,032	5,599	1,641	**10,866**	3,185	13,767	4,035	276	39.60
34	2,093	5,769	1,691	**11,195**	3,281	14,184	4,157	284	40.80
35	2,154	5,938	1,741	**11,524**	3,378	14,601	4,279	292	42.00
36	2,215	6,107	1,790	**11,853**	3,474	15,018	4,402	301	43.20
37	2,276	6,279	1,840	**12,183**	3,571	15,435	4,524	309	44.40
38	2,336	6,448	1,890	**12,512**	3,667	15,852	4,646	317	45.60
39	2,397	6,616	1,939	**12,841**	3,764	16,270	4,768	326	46.80
40	2,458	6,786	1,989	**13,170**	3,860	16,687	4,891	334	48.00

Lengths include the bush ends and are approximate, as cast iron is made by hand ; each extra section adds 60.8mm. Outputs to BS EN442. Delta T30 is calculated from the tested Delta T50 and T60 figures. Longer lengths on request.

Technical Drawing

Scale 1:10 on A4, the same on every height. In mm, approximate.

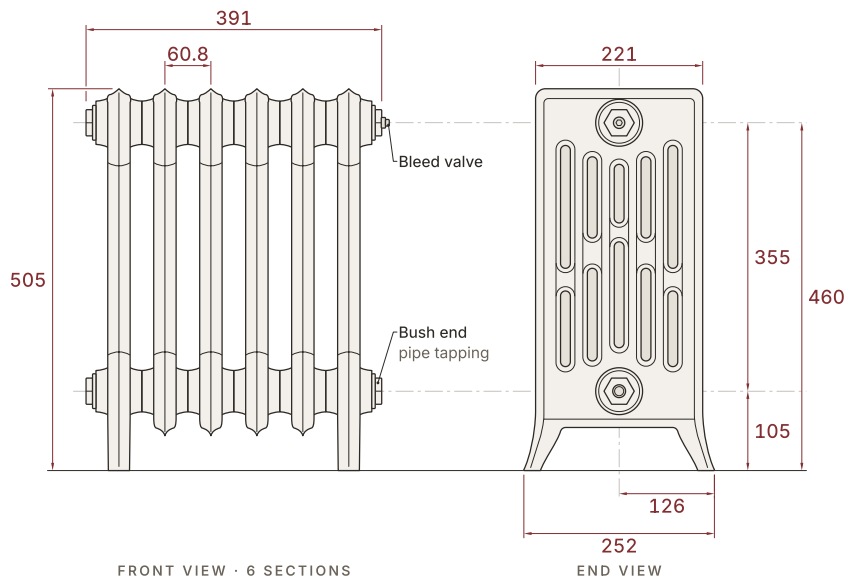

660mm High : Sizes, Heat Outputs And Drawing

Sections	Length mm	BTU Delta T30	Watts Delta T30	BTU Delta T50	Watts Delta T50	BTU Delta T60	Watts Delta T60	Weight kg	Water litres
4	269	889	261	**1,726**	506	2,187	641	38	5.60
5	330	1,112	326	**2,158**	633	2,734	801	48	7.00
6	391	1,335	391	**2,590**	759	3,281	962	58	8.40
7	452	1,556	456	**3,021**	886	3,828	1,122	67	9.80
8	512	1,779	521	**3,453**	1,012	4,375	1,282	77	11.20
9	573	2,002	587	**3,885**	1,139	4,922	1,442	86	12.60
10	634	2,223	652	**4,316**	1,265	5,469	1,603	96	14.00
11	695	2,447	718	**4,748**	1,392	6,015	1,763	105	15.40
12	756	2,668	782	**5,179**	1,518	6,562	1,923	115	16.80
13	816	2,891	848	**5,611**	1,645	7,109	2,084	125	18.20
14	877	3,114	913	**6,043**	1,771	7,656	2,244	134	19.60
15	938	3,335	978	**6,474**	1,898	8,203	2,404	144	21.00
16	999	3,558	1,043	**6,906**	2,024	8,750	2,564	153	22.40
17	1,060	3,781	1,108	**7,338**	2,151	9,297	2,725	163	23.80
18	1,120	4,004	1,173	**7,769**	2,277	9,843	2,885	173	25.20
19	1,181	4,227	1,239	**8,201**	2,404	10,390	3,045	182	26.60
20	1,242	4,448	1,304	**8,632**	2,530	10,937	3,206	192	28.00
21	1,303	4,671	1,369	**9,064**	2,657	11,484	3,366	201	29.40
22	1,364	4,894	1,434	**9,496**	2,783	12,031	3,526	211	30.80
23	1,424	5,115	1,499	**9,927**	2,910	12,578	3,686	221	32.20
24	1,485	5,338	1,564	**10,359**	3,036	13,125	3,847	230	33.60
25	1,546	5,559	1,629	**10,790**	3,163	13,672	4,007	240	35.00
26	1,607	5,783	1,695	**11,222**	3,289	14,218	4,167	249	36.40
27	1,668	6,006	1,760	**11,654**	3,416	14,765	4,327	259	37.80
28	1,728	6,227	1,825	**12,085**	3,542	15,312	4,488	269	39.20
29	1,789	6,450	1,891	**12,517**	3,669	15,859	4,648	278	40.60
30	1,850	6,673	1,956	**12,949**	3,795	16,406	4,808	288	42.00
31	1,911	6,894	2,021	**13,380**	3,922	16,953	4,969	297	43.40
32	1,972	7,117	2,086	**13,812**	4,048	17,500	5,129	307	44.80
33	2,032	7,339	2,151	**14,243**	4,175	18,046	5,289	316	46.20
34	2,093	7,562	2,216	**14,675**	4,301	18,593	5,449	326	47.60
35	2,154	7,785	2,282	**15,107**	4,428	19,140	5,610	336	49.00
36	2,215	8,006	2,346	**15,538**	4,554	19,687	5,770	345	50.40
37	2,276	8,229	2,412	**15,970**	4,681	20,234	5,930	355	51.80
38	2,336	8,450	2,477	**16,401**	4,807	20,781	6,090	364	53.20
39	2,397	8,673	2,542	**16,833**	4,934	21,328	6,251	374	54.60
40	2,458	8,897	2,608	**17,265**	5,060	21,874	6,411	384	56.00

Lengths include the bush ends and are approximate, as cast iron is made by hand ; each extra section adds 60.8mm. Outputs to BS EN442. Delta T30 is calculated from the tested Delta T50 and T60 figures. Longer lengths on request.

Technical Drawing

Scale 1:10 on A4, the same on every height. In mm, approximate.

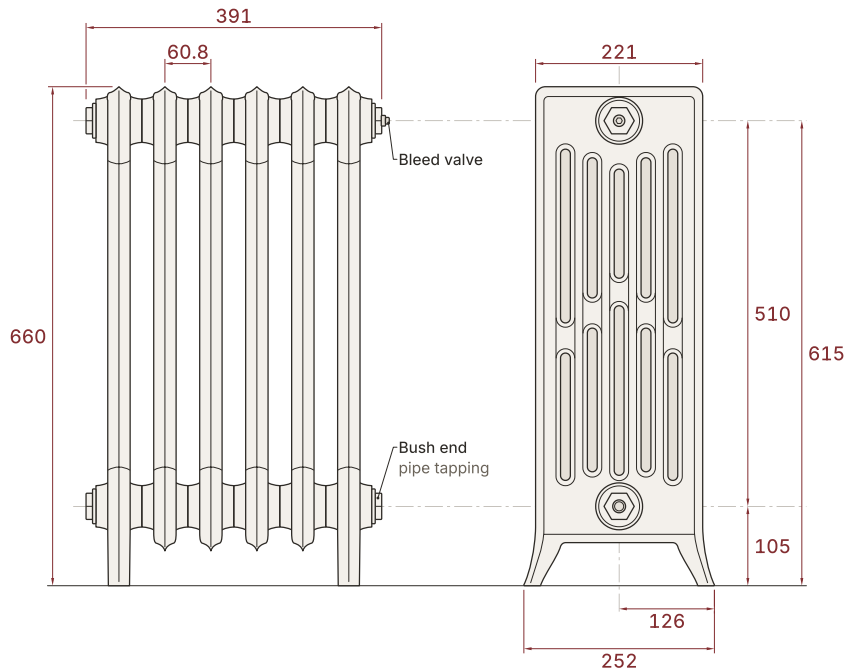

FRONT VIEW · 6 SECTIONS

END VIEW

960mm High : Sizes, Heat Outputs And Drawing

Sections	Length mm	BTU Delta T30	Watts Delta T30	BTU Delta T50	Watts Delta T50	BTU Delta T60	Watts Delta T60	Weight kg	Water litres
4	269	1,282	376	**2,489**	730	3,154	924	49	6.40
5	330	1,603	470	**3,112**	912	3,943	1,156	61	8.00
6	391	1,924	564	**3,734**	1,094	4,731	1,387	74	9.60
7	452	2,243	658	**4,356**	1,277	5,520	1,618	86	11.20
8	512	2,566	752	**4,979**	1,459	6,308	1,849	98	12.80
9	573	2,885	846	**5,601**	1,642	7,097	2,080	111	14.40
10	634	3,206	940	**6,223**	1,824	7,885	2,311	123	16.00
11	695	3,527	1,034	**6,846**	2,006	8,674	2,542	135	17.60
12	756	3,848	1,128	**7,468**	2,189	9,462	2,773	147	19.20
13	816	4,169	1,222	**8,091**	2,371	10,251	3,004	160	20.80
14	877	4,490	1,316	**8,713**	2,554	11,039	3,235	172	22.40
15	938	4,809	1,410	**9,335**	2,736	11,828	3,467	184	24.00
16	999	5,132	1,504	**9,958**	2,918	12,616	3,698	196	25.60
17	1,060	5,451	1,598	**10,580**	3,101	13,405	3,929	209	27.20
18	1,120	5,772	1,692	**11,202**	3,283	14,193	4,160	221	28.80
19	1,181	6,093	1,786	**11,825**	3,466	14,982	4,391	233	30.40
20	1,242	6,414	1,880	**12,447**	3,648	15,770	4,622	246	32.00
21	1,303	6,734	1,973	**13,069**	3,830	16,559	4,853	258	33.60
22	1,364	7,056	2,068	**13,692**	4,013	17,347	5,084	270	35.20
23	1,424	7,376	2,162	**14,314**	4,195	18,136	5,315	282	36.80
24	1,485	7,696	2,256	**14,936**	4,378	18,924	5,546	295	38.40
25	1,546	8,018	2,350	**15,559**	4,560	19,713	5,778	307	40.00
26	1,607	8,338	2,444	**16,181**	4,742	20,501	6,009	319	41.60
27	1,668	8,658	2,538	**16,803**	4,925	21,290	6,240	332	43.20
28	1,728	8,980	2,632	**17,426**	5,107	22,078	6,471	344	44.80
29	1,789	9,300	2,726	**18,048**	5,290	22,867	6,702	356	46.40
30	1,850	9,620	2,820	**18,670**	5,472	23,655	6,933	368	48.00
31	1,911	9,942	2,913	**19,293**	5,654	24,444	7,164	381	49.60
32	1,972	10,261	3,007	**19,915**	5,837	25,233	7,395	393	51.20
33	2,032	10,584	3,102	**20,538**	6,019	26,021	7,626	405	52.80
34	2,093	10,903	3,196	**21,160**	6,202	26,810	7,857	418	54.40
35	2,154	11,224	3,289	**21,782**	6,384	27,598	8,089	430	56.00
36	2,215	11,545	3,383	**22,405**	6,566	28,387	8,320	442	57.60
37	2,276	11,866	3,478	**23,027**	6,749	29,175	8,551	454	59.20
38	2,336	12,185	3,571	**23,649**	6,931	29,964	8,782	467	60.80
39	2,397	12,508	3,666	**24,272**	7,114	30,752	9,013	479	62.40
40	2,458	12,827	3,759	**24,894**	7,296	31,541	9,244	491	64.00

Lengths include the bush ends and are approximate, as cast iron is made by hand ; each extra section adds 60.8mm. Outputs to BS EN442. Delta T30 is calculated from the tested Delta T50 and T60 figures. Longer lengths on request.

Technical Drawing

Scale 1:10 on A4, the same on every height. In mm, approximate.

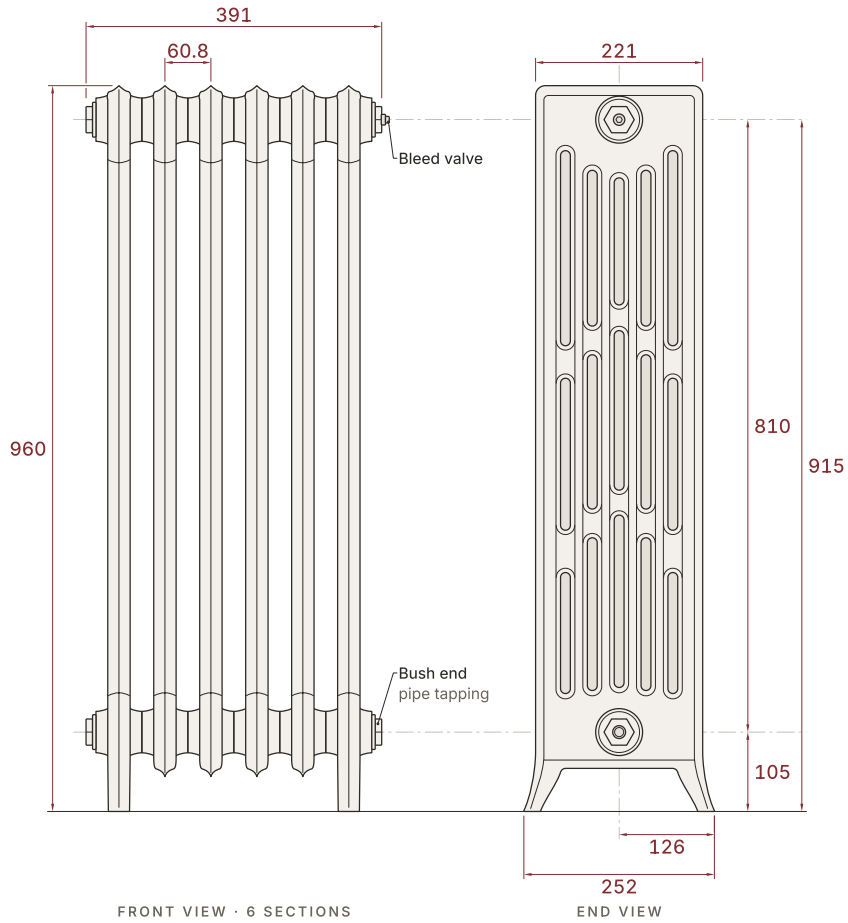

Finishes, Ordering And Care

Finishes

Every radiator is finished to order. Choose from our signature colours, traditional paint colours and antiqued paint effects, or a hand polished finish.

Hand polished finishes are available at 505 and 660mm high and priced per finish. Colour samples are available, and the sample charge is refunded when you order your radiator.

Made To Order

Hand built in England and made to order. Painted radiators take 4 to 6 weeks and hand polished finishes 6 to 8 weeks.

Delivery And Guarantee

Free delivery on orders of £1,000 or more, booked on a date that suits you. We deliver to Great Britain only. Every radiator carries our 10 year guarantee.

Valves And Accessories

Choose valves, wall stays, air vents and bush ends with your radiator on our website, so everything arrives together and matched to your finish.

Before You Fit

The radiator stands on its own feet. Check the floor can carry the filled weight, which is the radiator's weight plus about 1kg for every litre of water. Both are shown on each height's page.

We recommend fitting by a qualified heating engineer. Maximum working pressure 6.0 bar ; tested to 7.8 bar.

Visit Our Showroom

See our radiators finished and fitted in Brentwood. Open Monday to Friday from 9am to 5pm by appointment, and Saturdays from 10am to 2pm with no appointment needed.



Front, 660mm High



End, 660mm High



960mm High

When You Order

1 Height And Sections
Or the length that fits and the heat the room needs.

2 Finish
Your colour, or a hand polished finish.

3 Valves And Accessories
Valves, wall stays, air vents and bush ends.

4 Delivery Date
A date that suits you.

Call
01277 717 174

Email
sales@castironradiatorcompany.co.uk

Online
castironradiatorcompany.co.uk

Showroom
The Cast Iron Radiator Company
5-7 Coptfold Road
Brentwood, Essex CM14 4BN