

Shown 660mm high

Shoreditch Cast Iron Radiator

A slim two column cast iron radiator in a plain Victorian and Edwardian style, only 110mm deep, with rounded columns and simple lines. Hand built in England and made to order in your choice of finish, in three heights from 4 to 40 sections.

Heights	Sections	Columns	Section Width	Depth
460, 660 and 760mm	**4 to 40**	**2**	**60.6 to 61.9mm**	**110mm**

Floor To Lower Tapping	Working Pressure	Test Pressure	Heat Outputs	Tapping Centres
110mm at every height	**2.5 bar maximum**	**3.3 bar**	**Delta T30, T50 and T60, BS EN442**	**Height less 160mm**

Heights At A Glance

Height	Tapping Centres	Floor To Top Tapping	10 Sections : Delta T50	Page
460mm	300mm	410mm	1,509 BTU	3
660mm	500mm	610mm	2,207 BTU	4
760mm	600mm	710mm	2,543 BTU	5

Every height compared : page 2 **Ordering and care : page 6**

Good To Know

10 Year Guarantee
On every radiator.

Hand Built In England
Made to order in your finish.

Free Delivery
On orders of £1,000 or more, to a date you choose.

Choose Your Size : Every Height At Delta T50

1 Measure The Space

Find the length that fits under the window or along the wall. Lengths include the bush ends.

2 Find The Heat You Need

Read along the row to the height that gives the BTU or watts your room needs. Our website's BTU calculator works it out.

3 Open That Height's Page

It has Delta T60 outputs, weight, water content and the drawing with its tapping heights.

Delta T is the difference between the average water temperature in the radiator and the room temperature. Our website shows Delta T50.

Sections	460mm Length mm	460mm BTU	460mm Watts	660mm Length mm	660mm BTU	660mm Watts	760mm Length mm	760mm BTU	760mm Watts
4	277	**604**	177	279	**883**	259	282	**1,017**	298
5	337	**755**	221	341	**1,104**	323	344	**1,272**	373
6	398	**905**	265	402	**1,324**	388	405	**1,526**	447
7	458	**1,056**	310	463	**1,545**	453	467	**1,780**	522
8	519	**1,207**	354	524	**1,766**	518	529	**2,035**	596
9	580	**1,358**	398	586	**1,987**	582	591	**2,289**	671
10	640	**1,509**	442	647	**2,207**	647	653	**2,543**	745
11	701	**1,660**	487	708	**2,428**	712	715	**2,798**	820
12	762	**1,811**	531	770	**2,649**	776	777	**3,052**	894
13	822	**1,962**	575	831	**2,869**	841	839	**3,306**	969
14	883	**2,113**	619	892	**3,090**	906	901	**3,561**	1,044
15	944	**2,264**	663	954	**3,311**	970	963	**3,815**	1,118
16	1,004	**2,415**	708	1,015	**3,532**	1,035	1,024	**4,069**	1,193
17	1,065	**2,566**	752	1,076	**3,752**	1,100	1,086	**4,324**	1,267
18	1,126	**2,716**	796	1,137	**3,973**	1,164	1,148	**4,578**	1,342
19	1,186	**2,867**	840	1,199	**4,194**	1,229	1,210	**4,832**	1,416
20	1,247	**3,018**	885	1,260	**4,414**	1,294	1,272	**5,087**	1,491
21	1,307	**3,169**	929	1,321	**4,635**	1,358	1,334	**5,341**	1,565
22	1,368	**3,320**	973	1,383	**4,856**	1,423	1,396	**5,595**	1,640
23	1,429	**3,471**	1,017	1,444	**5,077**	1,488	1,458	**5,850**	1,714
24	1,489	**3,622**	1,062	1,505	**5,297**	1,553	1,520	**6,104**	1,789
25	1,550	**3,773**	1,106	1,567	**5,518**	1,617	1,582	**6,358**	1,864
26	1,611	**3,924**	1,150	1,628	**5,739**	1,682	1,643	**6,613**	1,938
27	1,671	**4,075**	1,194	1,689	**5,960**	1,747	1,705	**6,867**	2,013
28	1,732	**4,226**	1,238	1,750	**6,180**	1,811	1,767	**7,121**	2,087
29	1,793	**4,376**	1,283	1,812	**6,401**	1,876	1,829	**7,376**	2,162
30	1,853	**4,527**	1,327	1,873	**6,622**	1,941	1,891	**7,630**	2,236
31	1,914	**4,678**	1,371	1,934	**6,842**	2,005	1,953	**7,884**	2,311
32	1,974	**4,829**	1,415	1,996	**7,063**	2,070	2,015	**8,139**	2,385
33	2,035	**4,980**	1,460	2,057	**7,284**	2,135	2,077	**8,393**	2,460
34	2,096	**5,131**	1,504	2,118	**7,505**	2,199	2,139	**8,647**	2,534
35	2,156	**5,282**	1,548	2,180	**7,725**	2,264	2,201	**8,902**	2,609
36	2,217	**5,433**	1,592	2,241	**7,946**	2,329	2,262	**9,156**	2,683
37	2,278	**5,584**	1,637	2,302	**8,167**	2,394	2,324	**9,410**	2,758
38	2,338	**5,735**	1,681	2,363	**8,387**	2,458	2,386	**9,665**	2,833
39	2,399	**5,886**	1,725	2,425	**8,608**	2,523	2,448	**9,919**	2,907
40	2,460	**6,037**	1,769	2,486	**8,829**	2,588	2,510	**10,173**	2,982

460mm High : Sizes, Heat Outputs And Drawing

Sections	Length mm	BTU Delta T30	Watts Delta T30	BTU Delta T50	Watts Delta T50	BTU Delta T60	Watts Delta T60	Weight kg	Water litres
4	277	312	91	**604**	177	765	224	12	2.80
5	337	390	114	**755**	221	956	280	15	3.50
6	398	466	136	**905**	265	1,147	336	18	4.20
7	458	544	160	**1,056**	310	1,338	392	21	4.90
8	519	621	182	**1,207**	354	1,530	448	25	5.60
9	580	699	205	**1,358**	398	1,721	504	28	6.30
10	640	777	228	**1,509**	442	1,912	560	31	7.00
11	701	856	251	**1,660**	487	2,103	616	34	7.70
12	762	934	274	**1,811**	531	2,294	672	37	8.40
13	822	1,011	296	**1,962**	575	2,486	729	40	9.10
14	883	1,089	319	**2,113**	619	2,677	785	43	9.80
15	944	1,167	342	**2,264**	663	2,868	841	46	10.50
16	1,004	1,245	365	**2,415**	708	3,059	897	49	11.20
17	1,065	1,322	388	**2,566**	752	3,251	953	52	11.90
18	1,126	1,399	410	**2,716**	796	3,442	1,009	55	12.60
19	1,186	1,477	433	**2,867**	840	3,633	1,065	58	13.30
20	1,247	1,555	456	**3,018**	885	3,824	1,121	61	14.00
21	1,307	1,633	479	**3,169**	929	4,015	1,177	64	14.70
22	1,368	1,710	501	**3,320**	973	4,207	1,233	67	15.40
23	1,429	1,788	524	**3,471**	1,017	4,398	1,289	70	16.10
24	1,489	1,866	547	**3,622**	1,062	4,589	1,345	73	16.80
25	1,550	1,945	570	**3,773**	1,106	4,780	1,401	77	17.50
26	1,611	2,023	593	**3,924**	1,150	4,971	1,457	80	18.20
27	1,671	2,100	615	**4,075**	1,194	5,163	1,513	83	18.90
28	1,732	2,178	638	**4,226**	1,238	5,354	1,569	86	19.60
29	1,793	2,254	661	**4,376**	1,283	5,545	1,625	89	20.30
30	1,853	2,332	684	**4,527**	1,327	5,736	1,681	92	21.00
31	1,914	2,411	706	**4,678**	1,371	5,927	1,737	95	21.70
32	1,974	2,488	729	**4,829**	1,415	6,119	1,793	98	22.40
33	2,035	2,566	752	**4,980**	1,460	6,310	1,849	101	23.10
34	2,096	2,644	775	**5,131**	1,504	6,501	1,905	104	23.80
35	2,156	2,722	798	**5,282**	1,548	6,692	1,961	107	24.50
36	2,217	2,800	821	**5,433**	1,592	6,883	2,017	110	25.20
37	2,278	2,877	843	**5,584**	1,637	7,075	2,073	113	25.90
38	2,338	2,955	866	**5,735**	1,681	7,266	2,129	116	26.60
39	2,399	3,034	889	**5,886**	1,725	7,457	2,186	119	27.30
40	2,460	3,112	912	**6,037**	1,769	7,648	2,242	122	28.00

Lengths include the bush ends and are approximate, as cast iron is made by hand ; each extra section adds 60.6mm. Outputs to BS EN442. Delta T30 is calculated from the tested Delta T50 and T60 figures. Longer lengths on request.

Technical Drawing Scale 1:8 on A4, the same on every height. In mm, approximate.

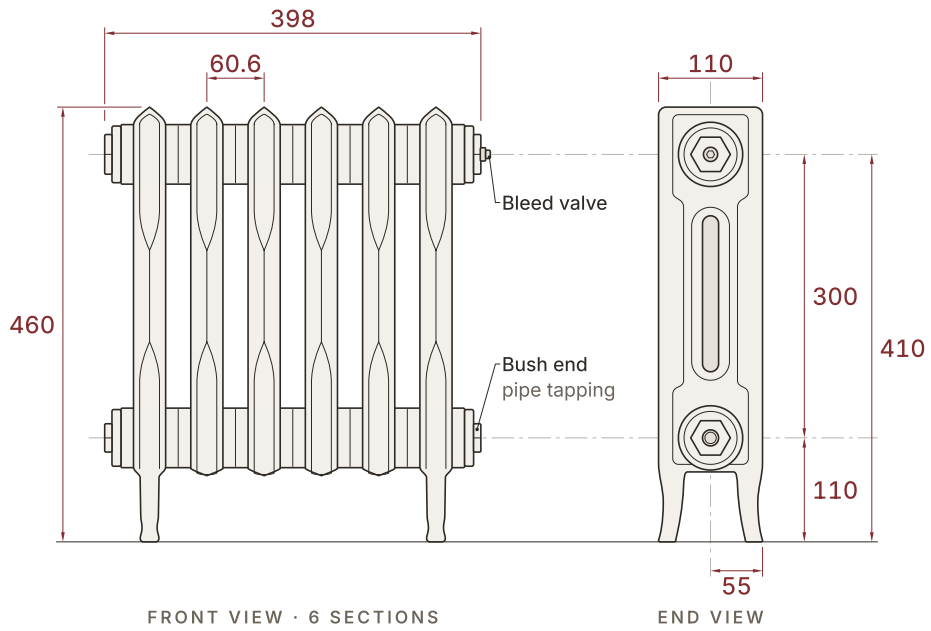

FRONT VIEW · 6 SECTIONS

END VIEW

660mm High : Sizes, Heat Outputs And Drawing

Sections	Length mm	BTU Delta T30	Watts Delta T30	BTU Delta T50	Watts Delta T50	BTU Delta T60	Watts Delta T60	Weight kg	Water litres
4	279	455	133	**883**	259	1,119	328	17	4.00
5	341	570	167	**1,104**	323	1,398	410	22	5.00
6	402	682	200	**1,324**	388	1,678	492	26	6.00
7	463	796	233	**1,545**	453	1,958	574	30	7.00
8	524	911	267	**1,766**	518	2,237	656	35	8.00
9	586	1,024	300	**1,987**	582	2,517	738	39	9.00
10	647	1,136	333	**2,207**	647	2,797	820	43	10.00
11	708	1,251	367	**2,428**	712	3,076	902	48	11.00
12	770	1,365	400	**2,649**	776	3,356	984	52	12.00
13	831	1,477	433	**2,869**	841	3,636	1,066	56	13.00
14	892	1,592	467	**3,090**	906	3,915	1,147	61	14.00
15	954	1,706	500	**3,311**	970	4,195	1,229	65	15.00
16	1,015	1,821	534	**3,532**	1,035	4,474	1,311	69	16.00
17	1,076	1,933	567	**3,752**	1,100	4,754	1,393	73	17.00
18	1,137	2,047	600	**3,973**	1,164	5,034	1,475	78	18.00
19	1,199	2,162	634	**4,194**	1,229	5,313	1,557	82	19.00
20	1,260	2,274	667	**4,414**	1,294	5,593	1,639	86	20.00
21	1,321	2,388	700	**4,635**	1,358	5,873	1,721	91	21.00
22	1,383	2,503	733	**4,856**	1,423	6,152	1,803	95	22.00
23	1,444	2,617	767	**5,077**	1,488	6,432	1,885	99	23.00
24	1,505	2,729	800	**5,297**	1,553	6,712	1,967	104	24.00
25	1,567	2,844	833	**5,518**	1,617	6,991	2,049	108	25.00
26	1,628	2,958	867	**5,739**	1,682	7,271	2,131	112	26.00
27	1,689	3,071	900	**5,960**	1,747	7,551	2,213	117	27.00
28	1,750	3,184	933	**6,180**	1,811	7,830	2,295	121	28.00
29	1,812	3,298	967	**6,401**	1,876	8,110	2,377	125	29.00
30	1,873	3,412	1,000	**6,622**	1,941	8,390	2,459	130	30.00
31	1,934	3,525	1,033	**6,842**	2,005	8,669	2,541	134	31.00
32	1,996	3,639	1,067	**7,063**	2,070	8,949	2,623	138	32.00
33	2,057	3,753	1,100	**7,284**	2,135	9,229	2,705	143	33.00
34	2,118	3,868	1,133	**7,505**	2,199	9,508	2,787	147	34.00
35	2,180	3,980	1,166	**7,725**	2,264	9,788	2,869	151	35.00
36	2,241	4,094	1,200	**7,946**	2,329	10,068	2,951	156	36.00
37	2,302	4,209	1,234	**8,167**	2,394	10,347	3,033	160	37.00
38	2,363	4,321	1,266	**8,387**	2,458	10,627	3,115	164	38.00
39	2,425	4,435	1,300	**8,608**	2,523	10,907	3,197	169	39.00
40	2,486	4,550	1,334	**8,829**	2,588	11,186	3,278	173	40.00

Lengths include the bush ends and are approximate, as cast iron is made by hand ; each extra section adds 61.3mm. Outputs to BS EN442. Delta T30 is calculated from the tested Delta T50 and T60 figures. Longer lengths on request.

Technical Drawing

Scale 1:8 on A4, the same on every height. In mm, approximate.

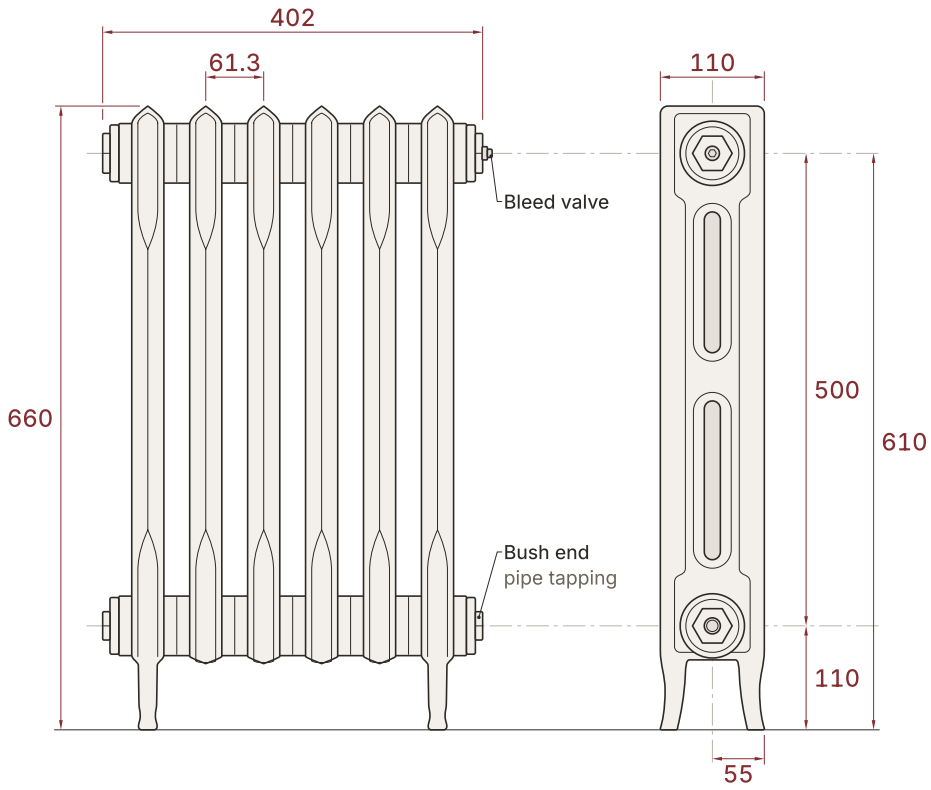

FRONT VIEW · 6 SECTIONS

END VIEW

760mm High : Sizes, Heat Outputs And Drawing

Sections	Length mm	BTU Delta T30	Watts Delta T30	BTU Delta T50	Watts Delta T50	BTU Delta T60	Watts Delta T60	Weight kg	Water litres
4	282	524	153	**1,017**	298	1,289	378	20	4.40
5	344	656	192	**1,272**	373	1,611	472	25	5.50
6	405	787	230	**1,526**	447	1,933	567	31	6.60
7	467	916	269	**1,780**	522	2,256	661	36	7.70
8	529	1,049	307	**2,035**	596	2,578	756	41	8.80
9	591	1,180	346	**2,289**	671	2,900	850	46	9.90
10	653	1,310	384	**2,543**	745	3,222	944	51	11.00
11	715	1,442	423	**2,798**	820	3,545	1,039	56	12.10
12	777	1,572	461	**3,052**	894	3,867	1,133	61	13.20
13	839	1,703	499	**3,306**	969	4,189	1,228	66	14.30
14	901	1,836	538	**3,561**	1,044	4,511	1,322	71	15.40
15	963	1,965	576	**3,815**	1,118	4,834	1,417	76	16.50
16	1,024	2,096	615	**4,069**	1,193	5,156	1,511	81	17.60
17	1,086	2,229	653	**4,324**	1,267	5,478	1,606	86	18.70
18	1,148	2,359	692	**4,578**	1,342	5,800	1,700	91	19.80
19	1,210	2,490	730	**4,832**	1,416	6,122	1,794	97	20.90
20	1,272	2,621	768	**5,087**	1,491	6,445	1,889	102	22.00
21	1,334	2,752	806	**5,341**	1,565	6,767	1,983	107	23.10
22	1,396	2,883	845	**5,595**	1,640	7,089	2,078	112	24.20
23	1,458	3,015	884	**5,850**	1,714	7,411	2,172	117	25.30
24	1,520	3,145	922	**6,104**	1,789	7,734	2,267	122	26.40
25	1,582	3,276	960	**6,358**	1,864	8,056	2,361	127	27.50
26	1,643	3,408	999	**6,613**	1,938	8,378	2,455	132	28.60
27	1,705	3,539	1,037	**6,867**	2,013	8,700	2,550	137	29.70
28	1,767	3,669	1,075	**7,121**	2,087	9,023	2,644	142	30.80
29	1,829	3,801	1,114	**7,376**	2,162	9,345	2,739	147	31.90
30	1,891	3,932	1,152	**7,630**	2,236	9,667	2,833	152	33.00
31	1,953	4,062	1,191	**7,884**	2,311	9,989	2,928	158	34.10
32	2,015	4,194	1,229	**8,139**	2,385	10,312	3,022	163	35.20
33	2,077	4,325	1,268	**8,393**	2,460	10,634	3,117	168	36.30
34	2,139	4,455	1,306	**8,647**	2,534	10,956	3,211	173	37.40
35	2,201	4,588	1,345	**8,902**	2,609	11,278	3,305	178	38.50
36	2,262	4,717	1,382	**9,156**	2,683	11,601	3,400	183	39.60
37	2,324	4,848	1,421	**9,410**	2,758	11,923	3,494	188	40.70
38	2,386	4,981	1,460	**9,665**	2,833	12,245	3,589	193	41.80
39	2,448	5,111	1,498	**9,919**	2,907	12,567	3,683	198	42.90
40	2,510	5,242	1,537	**10,173**	2,982	12,889	3,778	203	44.00

Lengths include the bush ends and are approximate, as cast iron is made by hand ; each extra section adds 61.9mm. Outputs to BS EN442. Delta T30 is calculated from the tested Delta T50 and T60 figures. Longer lengths on request.

Technical Drawing

Scale 1:8 on A4, the same on every height. In mm, approximate.

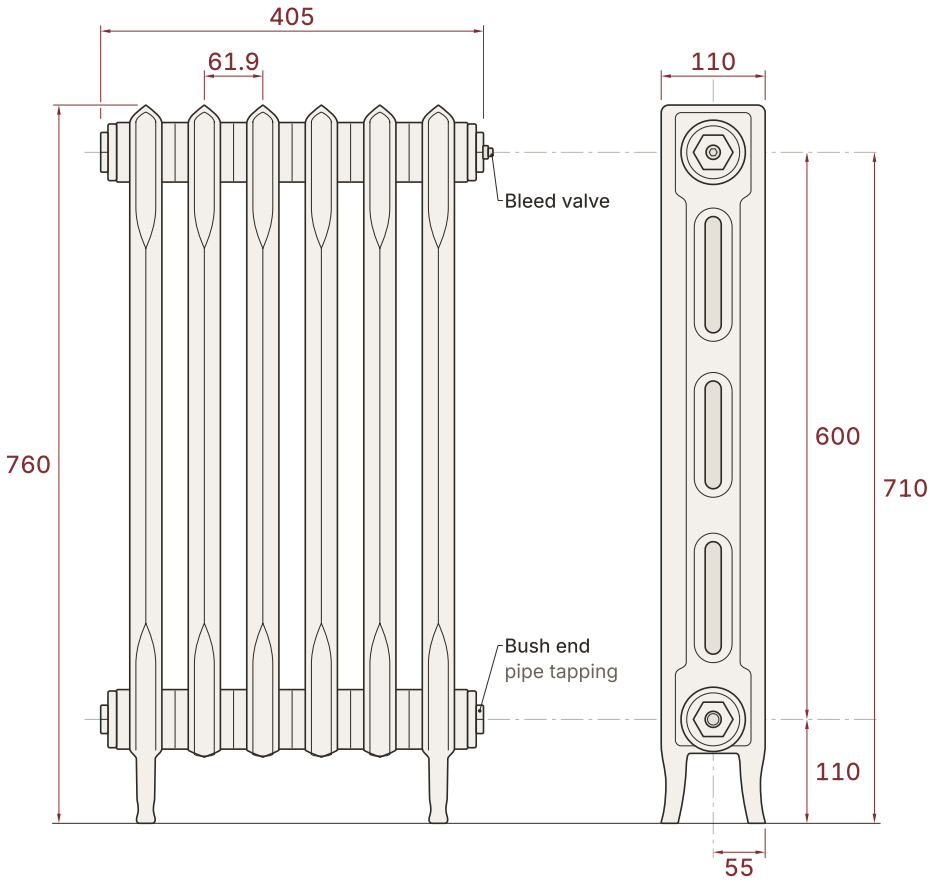

FRONT VIEW · 6 SECTIONS

END VIEW

Finishes, Ordering And Care

Finishes

Every radiator is finished to order. Choose from our signature colours, traditional paint colours and antiqued paint effects, or a hand polished finish.

Hand polished finishes are priced per finish. Colour samples are available, and the sample charge is refunded when you order your radiator.

Made To Order

Hand built in England and made to order. Painted radiators take 4 to 6 weeks and hand polished finishes 6 to 8 weeks.

Delivery And Guarantee

Free delivery on orders of £1,000 or more, booked on a date that suits you. We deliver to Great Britain only. Every radiator carries our 10 year guarantee.

Valves And Accessories

Choose valves, wall stays, air vents and bush ends with your radiator on our website, so everything arrives together and matched to your finish.

Before You Fit

The radiator stands on its own feet. Check the floor can carry the filled weight, which is the radiator's weight plus about 1kg for every litre of water. Both are shown on each height's page.

We recommend fitting by a qualified heating engineer. Maximum working pressure 2.5 bar ; tested to 3.3 bar.

Visit Our Showroom

See our radiators finished and fitted in Brentwood. Open Monday to Friday from 9am to 5pm by appointment, and Saturdays from 10am to 2pm with no appointment needed.



Front, 660mm High



End, 660mm High



460mm High



760mm High

When You Order

1 Height And Sections
Or the length that fits and the heat the room needs.

2 Finish
Your colour, or a hand polished finish.

3 Valves And Accessories
Valves, wall stays, air vents and bush ends.

4 Delivery Date
A date that suits you.

Call
01277 717 174

Email
sales@castironradiatorcompany.co.uk

Online
castironradiatorcompany.co.uk

Showroom
The Cast Iron Radiator Company
5-7 Coptfold Road
Brentwood, Essex CM14 4BN