

Shown 570mm high

Westminster Cast Iron Radiator

A deep, ornate cast iron radiator in the French style, every section cast with flowing scrollwork and topped with a small finial. Hand built in England and made to order in your choice of finish, in three heights from 4 to 40 sections.

Heights	Sections	Style	Section Width	Depth
470, 570 and 765mm	**4 to 40**	**Ornate**	**80.7 to 81.2mm**	**230mm, 250mm at the feet**

Floor To Lower Tapping	Working Pressure	Test Pressure	Heat Outputs	Tapping Centres
115mm at every height	**2.5 bar maximum**	**3.3 bar**	**Delta T30, T50 and T60, BS EN442**	**300, 400 and 600mm**

Heights At A Glance

Height	Tapping Centres	Floor To Top Tapping	10 Sections : Delta T50	Page
470mm	300mm	415mm	3,255 BTU	3
570mm	400mm	515mm	3,924 BTU	4
765mm	600mm	715mm	5,312 BTU	5

Every height compared : page 2 **Ordering and care : page 6**

Good To Know

10 Year Guarantee
On every radiator.

Hand Built In England
Made to order in your finish.

Free Delivery
On orders of £1,000 or more, to a date you choose.

Choose Your Size : Every Height At Delta T50

1 Measure The Space

Find the length that fits under the window or along the wall. Lengths include the bush ends.

2 Find The Heat You Need

Read along the row to the height that gives the BTU or watts your room needs. Our website's BTU calculator works it out.

3 Open That Height's Page

It has Delta T60 outputs, weight, water content and the drawing with its tapping heights.

Delta T is the difference between the average water temperature in the radiator and the room temperature. Our website shows Delta T50.

Sections	470mm Length mm	470mm BTU	470mm Watts	570mm Length mm	570mm BTU	570mm Watts	765mm Length mm	765mm BTU	765mm Watts
4	359	**1,302**	382	357	**1,570**	460	359	**2,125**	623
5	440	**1,628**	477	438	**1,962**	575	440	**2,656**	779
6	521	**1,953**	572	518	**2,354**	690	521	**3,187**	934
7	602	**2,279**	668	599	**2,747**	805	602	**3,719**	1,090
8	684	**2,604**	763	680	**3,139**	920	684	**4,250**	1,246
9	765	**2,930**	859	760	**3,531**	1,035	765	**4,781**	1,401
10	846	**3,255**	954	841	**3,924**	1,150	846	**5,312**	1,557
11	927	**3,581**	1,049	922	**4,316**	1,265	927	**5,844**	1,713
12	1,008	**3,906**	1,145	1,002	**4,709**	1,380	1,008	**6,375**	1,868
13	1,090	**4,232**	1,240	1,083	**5,101**	1,495	1,090	**6,906**	2,024
14	1,171	**4,557**	1,336	1,164	**5,493**	1,610	1,171	**7,437**	2,180
15	1,252	**4,883**	1,431	1,245	**5,886**	1,725	1,252	**7,969**	2,336
16	1,333	**5,208**	1,526	1,325	**6,278**	1,840	1,333	**8,500**	2,491
17	1,414	**5,534**	1,622	1,406	**6,670**	1,955	1,414	**9,031**	2,647
18	1,496	**5,859**	1,717	1,487	**7,063**	2,070	1,496	**9,562**	2,803
19	1,577	**6,185**	1,813	1,567	**7,455**	2,185	1,577	**10,094**	2,958
20	1,658	**6,510**	1,908	1,648	**7,848**	2,300	1,658	**10,625**	3,114
21	1,739	**6,836**	2,003	1,729	**8,240**	2,415	1,739	**11,156**	3,270
22	1,820	**7,161**	2,099	1,809	**8,632**	2,530	1,820	**11,687**	3,425
23	1,902	**7,487**	2,194	1,890	**9,025**	2,645	1,902	**12,219**	3,581
24	1,983	**7,812**	2,290	1,971	**9,417**	2,760	1,983	**12,750**	3,737
25	2,064	**8,138**	2,385	2,052	**9,810**	2,875	2,064	**13,281**	3,893
26	2,145	**8,463**	2,480	2,132	**10,202**	2,990	2,145	**13,812**	4,048
27	2,226	**8,789**	2,576	2,213	**10,594**	3,105	2,226	**14,344**	4,204
28	2,308	**9,114**	2,671	2,294	**10,987**	3,220	2,308	**14,875**	4,360
29	2,389	**9,440**	2,767	2,374	**11,379**	3,335	2,389	**15,406**	4,515
30	2,470	**9,765**	2,862	2,455	**11,771**	3,450	2,470	**15,937**	4,671
31	2,551	**10,091**	2,957	2,536	**12,164**	3,565	2,551	**16,469**	4,827
32	2,632	**10,416**	3,053	2,616	**12,556**	3,680	2,632	**17,000**	4,982
33	2,714	**10,742**	3,148	2,697	**12,949**	3,795	2,714	**17,531**	5,138
34	2,795	**11,067**	3,244	2,778	**13,341**	3,910	2,795	**18,062**	5,294
35	2,876	**11,393**	3,339	2,859	**13,733**	4,025	2,876	**18,594**	5,450
36	2,957	**11,718**	3,434	2,939	**14,126**	4,140	2,957	**19,125**	5,605
37	3,038	**12,044**	3,530	3,020	**14,518**	4,255	3,038	**19,656**	5,761
38	3,120	**12,369**	3,625	3,101	**14,910**	4,370	3,120	**20,187**	5,917
39	3,201	**12,695**	3,721	3,181	**15,303**	4,485	3,201	**20,719**	6,072
40	3,282	**13,020**	3,816	3,262	**15,695**	4,600	3,282	**21,250**	6,228

470mm High : Sizes, Heat Outputs And Drawing

Sections	Length mm	BTU Delta T30	Watts Delta T30	BTU Delta T50	Watts Delta T50	BTU Delta T60	Watts Delta T60	Weight kg	Water litres
4	359	670	197	**1,302**	382	1,650	483	33	6.80
5	440	840	246	**1,628**	477	2,062	604	41	8.50
6	521	1,007	295	**1,953**	572	2,474	725	49	10.20
7	602	1,175	344	**2,279**	668	2,887	846	58	11.90
8	684	1,342	393	**2,604**	763	3,299	967	66	13.60
9	765	1,510	443	**2,930**	859	3,712	1,088	74	15.30
10	846	1,677	492	**3,255**	954	4,124	1,209	82	17.00
11	927	1,845	541	**3,581**	1,049	4,537	1,330	91	18.70
12	1,008	2,013	590	**3,906**	1,145	4,949	1,450	99	20.40
13	1,090	2,182	639	**4,232**	1,240	5,361	1,571	107	22.10
14	1,171	2,348	688	**4,557**	1,336	5,774	1,692	115	23.80
15	1,252	2,517	738	**4,883**	1,431	6,186	1,813	124	25.50
16	1,333	2,683	786	**5,208**	1,526	6,599	1,934	132	27.20
17	1,414	2,852	836	**5,534**	1,622	7,011	2,055	140	28.90
18	1,496	3,019	885	**5,859**	1,717	7,423	2,176	148	30.60
19	1,577	3,187	934	**6,185**	1,813	7,836	2,297	157	32.30
20	1,658	3,355	983	**6,510**	1,908	8,248	2,417	165	34.00
21	1,739	3,523	1,032	**6,836**	2,003	8,661	2,538	173	35.70
22	1,820	3,690	1,082	**7,161**	2,099	9,073	2,659	181	37.40
23	1,902	3,858	1,131	**7,487**	2,194	9,486	2,780	189	39.10
24	1,983	4,025	1,180	**7,812**	2,290	9,898	2,901	198	40.80
25	2,064	4,194	1,229	**8,138**	2,385	10,310	3,022	206	42.50
26	2,145	4,360	1,278	**8,463**	2,480	10,723	3,143	214	44.20
27	2,226	4,530	1,328	**8,789**	2,576	11,135	3,264	223	45.90
28	2,308	4,696	1,376	**9,114**	2,671	11,548	3,384	231	47.60
29	2,389	4,865	1,426	**9,440**	2,767	11,960	3,505	239	49.30
30	2,470	5,032	1,475	**9,765**	2,862	12,372	3,626	247	51.00
31	2,551	5,200	1,524	**10,091**	2,957	12,785	3,747	255	52.70
32	2,632	5,367	1,573	**10,416**	3,053	13,197	3,868	264	54.40
33	2,714	5,535	1,622	**10,742**	3,148	13,610	3,989	272	56.10
34	2,795	5,702	1,672	**11,067**	3,244	14,022	4,110	280	57.80
35	2,876	5,870	1,720	**11,393**	3,339	14,435	4,231	288	59.50
36	2,957	6,038	1,769	**11,718**	3,434	14,847	4,351	297	61.20
37	3,038	6,207	1,819	**12,044**	3,530	15,259	4,472	305	62.90
38	3,120	6,373	1,868	**12,369**	3,625	15,672	4,593	313	64.60
39	3,201	6,542	1,918	**12,695**	3,721	16,084	4,714	321	66.30
40	3,282	6,708	1,966	**13,020**	3,816	16,497	4,835	330	68.00

Lengths include the bush ends and are approximate, as cast iron is made by hand ; each extra section adds 81.2mm. Outputs to BS EN442. Delta T30 is calculated from the tested Delta T50 and T60 figures. Longer lengths on request. Height is to the top of the section ; the small finial on each section rises above it.

Technical Drawing Scale 1:10 on A4, the same on every height. In mm, approximate.

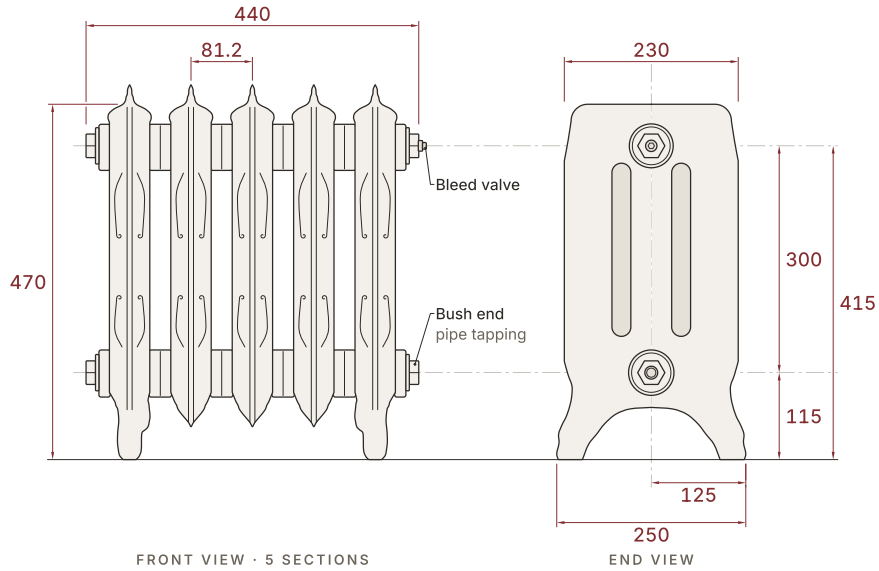

FRONT VIEW · 5 SECTIONS

END VIEW

570mm High : Sizes, Heat Outputs And Drawing

Sections	Length mm	BTU Delta T30	Watts Delta T30	BTU Delta T50	Watts Delta T50	BTU Delta T60	Watts Delta T60	Weight kg	Water litres
4	357	809	237	**1,570**	460	1,989	583	40	8.40
5	438	1,011	296	**1,962**	575	2,486	729	50	10.50
6	518	1,212	355	**2,354**	690	2,983	874	60	12.60
7	599	1,416	415	**2,747**	805	3,480	1,020	69	14.70
8	680	1,618	474	**3,139**	920	3,977	1,166	79	16.80
9	760	1,819	533	**3,531**	1,035	4,474	1,311	89	18.90
10	841	2,023	593	**3,924**	1,150	4,971	1,457	99	21.00
11	922	2,223	652	**4,316**	1,265	5,469	1,603	109	23.10
12	1,002	2,427	711	**4,709**	1,380	5,966	1,748	119	25.20
13	1,083	2,628	770	**5,101**	1,495	6,463	1,894	129	27.30
14	1,164	2,830	829	**5,493**	1,610	6,960	2,040	139	29.40
15	1,245	3,034	889	**5,886**	1,725	7,457	2,186	149	31.50
16	1,325	3,235	948	**6,278**	1,840	7,954	2,331	159	33.60
17	1,406	3,437	1,007	**6,670**	1,955	8,451	2,477	169	35.70
18	1,487	3,639	1,067	**7,063**	2,070	8,949	2,623	179	37.80
19	1,567	3,841	1,126	**7,455**	2,185	9,446	2,768	189	39.90
20	1,648	4,044	1,185	**7,848**	2,300	9,943	2,914	198	42.00
21	1,729	4,246	1,244	**8,240**	2,415	10,440	3,060	208	44.10
22	1,809	4,448	1,304	**8,632**	2,530	10,937	3,206	218	46.20
23	1,890	4,651	1,363	**9,025**	2,645	11,434	3,351	228	48.30
24	1,971	4,853	1,422	**9,417**	2,760	11,931	3,497	238	50.40
25	2,052	5,055	1,482	**9,810**	2,875	12,429	3,643	248	52.50
26	2,132	5,257	1,541	**10,202**	2,990	12,926	3,788	258	54.60
27	2,213	5,458	1,600	**10,594**	3,105	13,423	3,934	268	56.70
28	2,294	5,662	1,659	**10,987**	3,220	13,920	4,080	278	58.80
29	2,374	5,864	1,719	**11,379**	3,335	14,417	4,225	288	60.90
30	2,455	6,065	1,778	**11,771**	3,450	14,914	4,371	298	63.00
31	2,536	6,268	1,837	**12,164**	3,565	15,412	4,517	308	65.10
32	2,616	6,469	1,896	**12,556**	3,680	15,909	4,663	317	67.20
33	2,697	6,673	1,956	**12,949**	3,795	16,406	4,808	327	69.30
34	2,778	6,874	2,015	**13,341**	3,910	16,903	4,954	337	71.40
35	2,859	7,076	2,074	**13,733**	4,025	17,400	5,100	347	73.50
36	2,939	7,280	2,133	**14,126**	4,140	17,897	5,245	357	75.60
37	3,020	7,481	2,193	**14,518**	4,255	18,394	5,391	367	77.70
38	3,101	7,682	2,251	**14,910**	4,370	18,892	5,537	377	79.80
39	3,181	7,885	2,311	**15,303**	4,485	19,389	5,682	387	81.90
40	3,262	8,087	2,370	**15,695**	4,600	19,886	5,828	397	84.00

Lengths include the bush ends and are approximate, as cast iron is made by hand ; each extra section adds 80.7mm. Outputs to BS EN442. Delta T30 is calculated from the tested Delta T50 and T60 figures. Longer lengths on request. Height is to the top of the section ; the small finial on each section rises above it.

Technical Drawing

Scale 1:10 on A4, the same on every height. In mm, approximate.

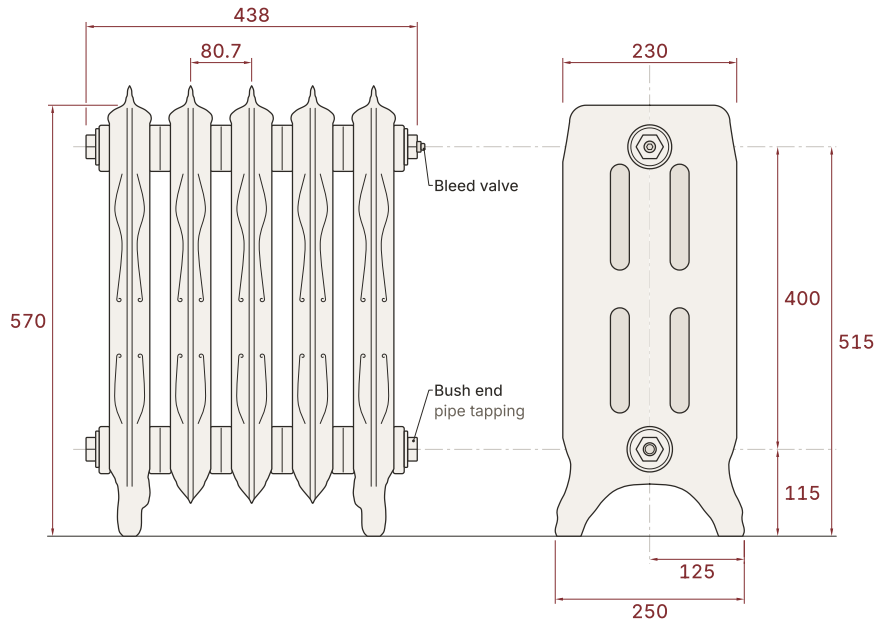

FRONT VIEW · 5 SECTIONS

END VIEW

765mm High : Sizes, Heat Outputs And Drawing

Sections	Length mm	BTU Delta T30	Watts Delta T30	BTU Delta T50	Watts Delta T50	BTU Delta T60	Watts Delta T60	Weight kg	Water litres
4	359	1,095	321	**2,125**	623	2,692	789	59	10.8
5	440	1,369	401	**2,656**	779	3,365	986	74	13.5
6	521	1,641	481	**3,187**	934	4,039	1,184	89	16.2
7	602	1,916	562	**3,719**	1,090	4,712	1,381	103	18.9
8	684	2,190	642	**4,250**	1,246	5,385	1,578	118	21.6
9	765	2,463	722	**4,781**	1,401	6,058	1,775	133	24.3
10	846	2,736	802	**5,312**	1,557	6,731	1,973	148	27.0
11	927	3,012	883	**5,844**	1,713	7,404	2,170	162	29.7
12	1,008	3,285	963	**6,375**	1,868	8,077	2,367	177	32.4
13	1,090	3,558	1,043	**6,906**	2,024	8,750	2,565	192	35.1
14	1,171	3,832	1,123	**7,437**	2,180	9,423	2,762	207	37.8
15	1,252	4,107	1,204	**7,969**	2,336	10,096	2,959	221	40.5
16	1,333	4,380	1,284	**8,500**	2,491	10,769	3,156	236	43.2
17	1,414	4,653	1,364	**9,031**	2,647	11,443	3,354	251	45.9
18	1,496	4,926	1,444	**9,562**	2,803	12,116	3,551	266	48.6
19	1,577	5,201	1,524	**10,094**	2,958	12,789	3,748	280	51.3
20	1,658	5,475	1,605	**10,625**	3,114	13,462	3,945	295	54.0
21	1,739	5,748	1,685	**11,156**	3,270	14,135	4,143	310	56.7
22	1,820	6,021	1,765	**11,687**	3,425	14,808	4,340	325	59.4
23	1,902	6,297	1,845	**12,219**	3,581	15,481	4,537	340	62.1
24	1,983	6,570	1,926	**12,750**	3,737	16,154	4,735	354	64.8
25	2,064	6,843	2,006	**13,281**	3,893	16,827	4,932	369	67.5
26	2,145	7,117	2,086	**13,812**	4,048	17,500	5,129	384	70.2
27	2,226	7,392	2,167	**14,344**	4,204	18,173	5,326	399	72.9
28	2,308	7,664	2,246	**14,875**	4,360	18,847	5,524	413	75.6
29	2,389	7,938	2,326	**15,406**	4,515	19,520	5,721	428	78.3
30	2,470	8,211	2,407	**15,937**	4,671	20,193	5,918	443	81.0
31	2,551	8,486	2,487	**16,469**	4,827	20,866	6,115	458	83.7
32	2,632	8,760	2,567	**17,000**	4,982	21,539	6,313	472	86.4
33	2,714	9,033	2,647	**17,531**	5,138	22,212	6,510	487	89.1
34	2,795	9,306	2,728	**18,062**	5,294	22,885	6,707	502	91.8
35	2,876	9,582	2,808	**18,594**	5,450	23,558	6,905	517	94.5
36	2,957	9,855	2,888	**19,125**	5,605	24,231	7,102	531	97.2
37	3,038	10,128	2,969	**19,656**	5,761	24,904	7,299	546	99.9
38	3,120	10,402	3,049	**20,187**	5,917	25,577	7,496	561	102.6
39	3,201	10,676	3,129	**20,719**	6,072	26,251	7,694	576	105.3
40	3,282	10,949	3,209	**21,250**	6,228	26,924	7,891	590	108.0

Lengths include the bush ends and are approximate, as cast iron is made by hand ; each extra section adds 81.2mm. Outputs to BS EN442. Delta T30 is calculated from the tested Delta T50 and T60 figures. Longer lengths on request. Height is to the top of the section ; the small finial on each section rises above it.

Technical Drawing Scale 1:10 on A4, the same on every height. In mm, approximate.

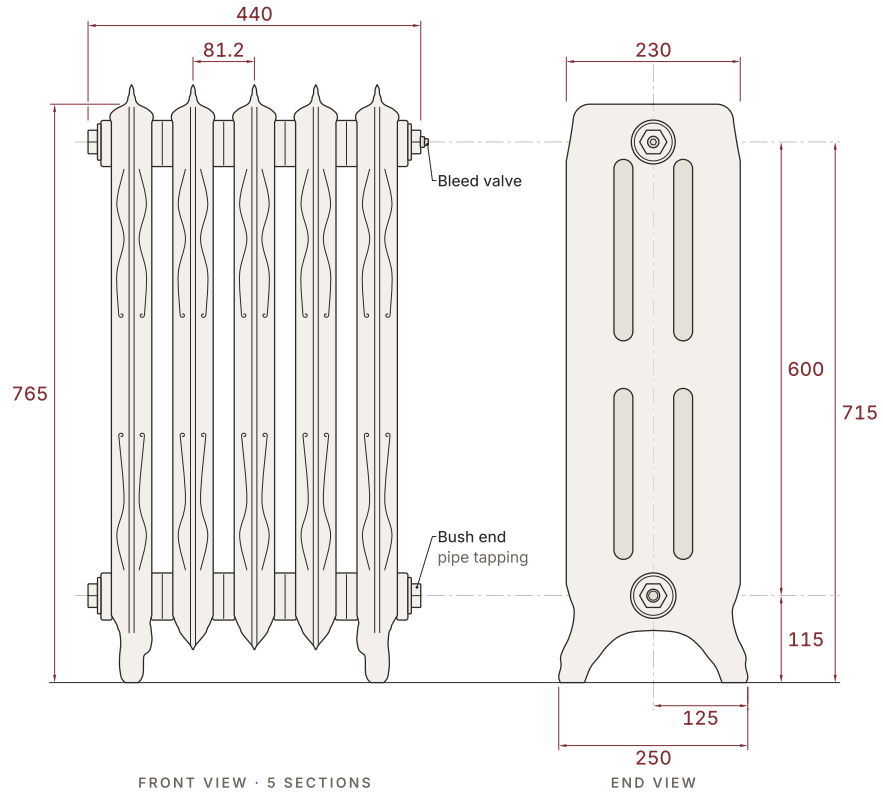

FRONT VIEW · 5 SECTIONS

END VIEW

Finishes, Ordering And Care

Finishes

Every radiator is finished to order. Choose from our signature colours, traditional paint colours, antiqued and highlight paint effects, or a hand polished finish.

Hand polished finishes are priced per finish. Colour samples are available, and the sample charge is refunded when you order your radiator.

Made To Order

Hand built in England and made to order. Painted radiators take 4 to 6 weeks and hand polished finishes 6 to 8 weeks.

Delivery And Guarantee

Free delivery on orders of £1,000 or more, booked on a date that suits you. We deliver to Great Britain only. Every radiator carries our 10 year guarantee.

Valves And Accessories

Choose valves, wall stays, air vents and bush ends with your radiator on our website, so everything arrives together and matched to your finish.

Before You Fit

The radiator stands on its own feet. Check the floor can carry the filled weight, which is the radiator's weight plus about 1kg for every litre of water. Both are shown on each height's page.

We recommend fitting by a qualified heating engineer. Maximum working pressure 2.5 bar ; tested to 3.3 bar.

Visit Our Showroom

See our radiators finished and fitted in Brentwood. Open Monday to Friday from 9am to 5pm by appointment, and Saturdays from 10am to 2pm with no appointment needed.

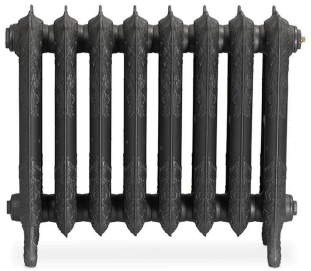

Front, 570mm High



End, 570mm High



765mm High



470mm High

When You Order

1 Height And Sections
Or the length that fits and the heat the room needs.

2 Finish
Your colour, or a hand polished finish.

3 Valves And Accessories
Valves, wall stays, air vents and bush ends.

4 Delivery Date
A date that suits you.

Call
01277 717 174

Email
sales@castironradiatorcompany.co.uk

Online
castironradiatorcompany.co.uk

Showroom
The Cast Iron Radiator Company
5-7 Coptfold Road
Brentwood, Essex CM14 4BN